CETO
Bathroom Art
2024

https://www.poseidonbk.com.au

Directory

Vanity

Avalon	21
Bellevue	23
Bellevue Ensuite	25
Bronte	27
Brighton	29
Brindabella	31
Harington	33
Kirribilli	35
Acacia	37
Fremantle	41
Technical drawing	42

Vanity Top

Calacatta	51
Night Sky	52
Matte White	53
Carrara White	54
Diamond Top	55
Chiefly	56

Mirror Cabinet

Olivia LED	61
Olivia Plain	63
Olivia Tallboy & Others	64
Fremantle	65
Technical drawing	66

Art Basin

Elba	73
Kiekby	75
Percy	77
Ally	79
Waverly	81
Cascade	83
Technical drawing	84

Bathtub

Cascade	93
Harrington	95
Waverly	97
Ally	99
Bari	101
Capri	103
Como	105
Mayfair	107
Technical drawing	108

Sink

Camden	115
Chelsea	117
Greenwich	119
Kensington	121
Technical drawing	122

Welcome to the World of
CETO

Our Story

Innovation That Turns Your Bathroom Dreams into Realities

At CETO, we pride ourselves on delivering top-tier bathroom products honed through more than 20 years of industry experience. Our goal is to establish a naturally-infused aesthetic identity that captures the core essence of crafting the ultimate bathroom art, customized for the Australian way of life. With a blend of minimalistic and contemporary elegance, our designs achieve a harmonious level of luxury and practicality. Explore an extensive array of styles, ranging from timeless classics to artisanal marvels, as we invite you to elevate your bathroom to new heights.

Beyond the ordinary, we surpass the mainstream to redefine bathroom decor, striving to blend modern design with uncompromising quality. Our dedicated team of industry-experienced craftsmen works diligently to ensure every detail meets our highest standards. In today's hectic and fast-paced world, our products aim to to create a sanctuary that echoes with the tranquility of nature, providing a deep feeling of comfort.

Innovative Design

Premium Craftsmanship

Lifetime Guarantee

@CETOAUSTRALIA

WEBSITE

Design Concept

The Art of Pure Luxury

Guided by the principles of minimalism, CETO creates designs that blend the purity of Nordic aesthetics with the vibrancy of Australian living.This natural synergy between two distinct worlds creates a unique and immersive experience that transcends boundaries.

Our designs are more than aesthetics – they are a lifestyle. CETO's philosophy embraces simplicity and tactile richness, incorporating iconic V-groove that pay homage to both cultures, seamlessly intertwining them into a cohesive visual narrative.

Experience a harmonious lifestyle where modernity meets tradition, and every detail invites you to touch, feel, and connect.

The CETO Standard

Industry Professionals

With more than two decades of experience, CETO has firmly established itself as a leader in the wholesale and commercial bathroom supplies sector.We proudly serve a loyal network of more than 270 retailers, and our commitment to growth continues as we welcome new customers into our fold.

Quality & Craftsmanship

We are committed to providing you with premium, enduring products designed to stand the test of time. Partnering with esteemed Australian leaders in design, innovation, manufacturing, and sustainability for more than two decades, we ensure the highest quality standards. Our products undergo rigorous design testing and quality controls, guaranteeing they exceed our lengthy warranty periods with exceptional performance.

Shaping a Sustainable Future

At CETO, our dedication to a sustainable future drives every facet of our work. We believe that by meticulously crafting vanity products with high-quality materials. We are not only creating superior items but also making a profound impact on the environment. Our commitment to sustainability extends beyond exceptional craftsmanship — it's a promise to nurture the world around us.

Made to last a lifetime

Warranty

		Domestic Use	Commercial Use / Public Use
VANITY	PVC Cabinet	**10** Years	**3** Years
	MDF Cabinet	**5** Year	**1** Year
	Legs & Runners	**3** Years	**1** Year
SHAVING CABINET	Mirror Door	**1** Year	**1** Years
	Cabinet	**10** Years	**3** Year
Vanity Top	Cast Stone top	**Lifetime**	**5** Years
BASIN	Ceramic	**10** Years	**5** Years
	Pop-Up Waste	**1** Year	**1** Year
BATHTUB	Acrylic Bath Shell	**5** Years	**3** Years
	Parts	**1** Year	**1** Year
	Bath Outlets	**3** Years	**1** Years
SINK	Fireclay Sink	**10** Years	**5** Years
	Waste	**1** Year	**1** Year

CETO Stone Tops

Redefining Bathroom Luxury

CETO stone tops offer an exceptional selection of colors to perfectly complement our diverse range of products.
With a color palette inspired by the beauty of nature, you can find the ideal shade to harmonize with your bathroom's aesthetics.

New Calacatta

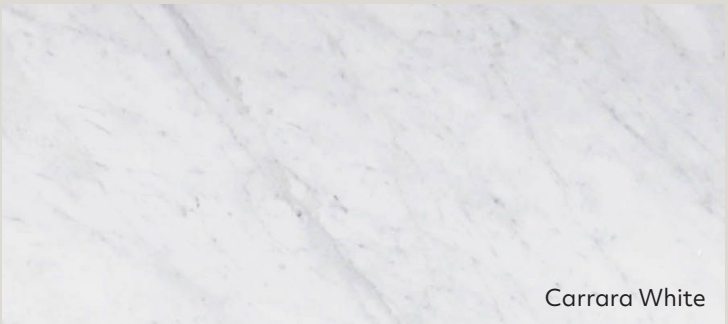
Carrara White

Night Sky

Nero Maquina

Matte White

VANITY

A compositional play of angles, lines and shapes

Introducing the CETO Vanity Range – a masterful fusion of design and functionality tailored to enhance diverse bathroom aesthetics and dimensions. Crafted with durable PVC and MDF construction, these pieces are waterproof and ideal for the bathroom setting. The elegant Wall Hung style not only optimizes space but also sparks creativity.

AVALON

493(D)x470(H)mm

Combining functionality with aesthetic appeal, the Avalon wall hung PVC vanity is designed to be water-proof and is available in a choice of two colors. Features an attractive metallic handle and soft-closing door & drawer for added convenience.

600mm

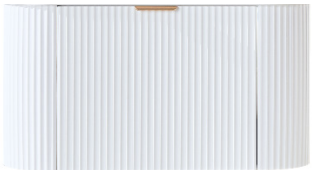

750 / 900mm

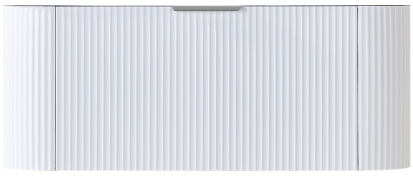

1200mm

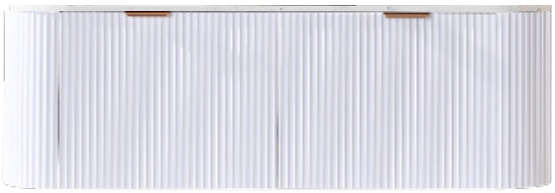

1500mm

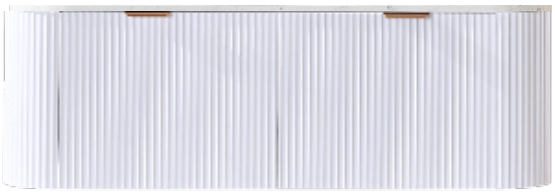

1800mm

Vanity

Matte White — MW

Matte Black — MB

Stone Top

Blank White — QST (Quartz)

Nero Maquina — MST (Marble)

Carrara White

Please visit our website for more top options

Handle

Matte White

Brushed Nickel

Brushed Gold

Gun Metal

Matte Black

600mm

Soft closing door

CA600W-MW/MB	$ 595
+ stone top	
- QST	$899
- MST	$979

750mm

CA750W-MW/MB	$ 759
+ stone top	
- QST	$ 1090
- MST	$ 1149

900mm

CA900W-MW/MB	$ 849
+ stone top	
- QST	$ 1175
- MST	$ 1265

1200mm

CA1200W-MW/MB	$ 969
+ stone top	
- QST	$ 1385
- MST	$ 1475

1500mm

CA1500W-MW/MB	$ 1209
+ stone top	
- QST	$ 1715
- MST	$ 1805

1800mm

CA1800W-MW/MB	$ 1395
+ stone top	
- QST	$ 1970

BELLEVUE

496(D)x380(H)mm

Exuding stunning charm, the Bellevue wall hung vanity range boasts a MDF woodgrain thermolaminated V-Groove finish. Convenient push-to-open drawer and internal shelf providing ample storage options with a perfect blend of style and practicality.

600mm

750mm

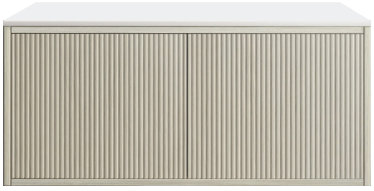

900mm

1200mm

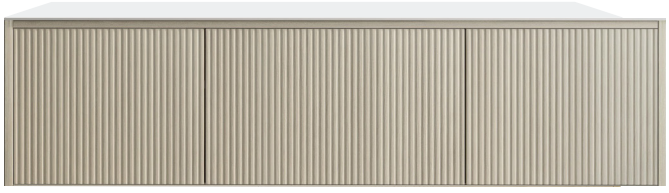

1500mm

Vanity

Prime Oak

PO

Costal Oak

CO

Stone Top

Blank White

Bianco Twirl

QST
(Quartz)

Nero Maquina

Carrara White

MST
(Marble)

600mm

K65W-CO/PO	$ 1099
+ stone top	
- QST	$ 1355
- MST	$ 1449

750mm

K75W-CO/PO	$ 1239
+ stone top	
- QST	$ 1525
- MST	$ 1615

900mm

K95LW-CO/PO	
K95RW-CO/PO	$ 1339
+ stone top	
- QST	$ 1635
- MST	$ 1735

1200mm

K125LW-CO/PO	
K125RW-CO/PO	$ 1750
+ stone top	
- QST	$ 2099
- MST	$ 2199

1500mm

K155W-CO/PO	$ 2209
+ stone top	
- QST	$ 2649
- MST	$ 2760

BELLEVUE Ensuite

386(D)x380(H)mm

Tailor-made for petite bathrooms, the Bellevue Ensuite wall hung collection features a stylish MDF woodgrain thermolaminated V-Groove finish and a slimmer size, offering an elegant solution that perfectly fits your space.

450mm

600mm

750mm

900mm

1200mm

1500mm

Vanity

Prime Oak

PO

Costal Oak

CO

Stone Top

Blank White

QST (Quartz)

Nero Maquina

Carrara White

MST (Marble)

450mm

250*670mm

K42WCO-PT	
K42WPO-PT	$ 515

* Poly top included (4525B)

600mm

K63W-CO/PO	$ 1009
+ stone top	
- QST	$ 1265
- MST	$ 1359

750mm

K73W-CO/PO	$ 1149
+ stone top	
- QST	$ 1435
- MST	$ 1559

900mm

K93LW-CO/PO	
K93RW-CO/PO	$ 1249
+ stone top	
- QST	$ 1540
- MST	$ 1640

1200mm

K123LW-CO/PO	
K123RW-CO/PO	$ 1659
+ stone top	
- QST	$ 2009
- MST	$ 2109

1500mm

K153W-CO/PO	$ 2119
+ stone top	
- QST	$ 2559
- MST	$ 2675

BRONTE

493(D)x347(H)mm

Embodying grace, the Bronte wall hung MDF cabinet showcases an exquisite wood grain texture and a meticulously crafted arc-shaped design. Its thermolaminated V-Groove and push-open drawer combine beauty with functionality.

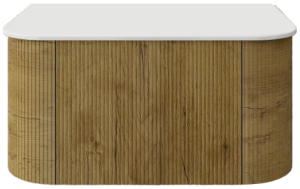

750mm

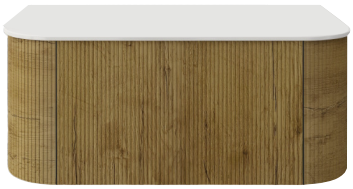

900mm

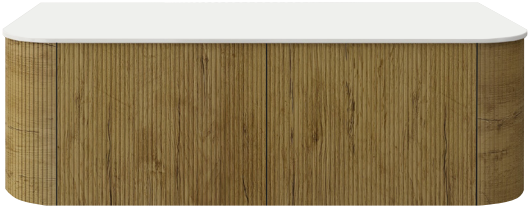

1200mm

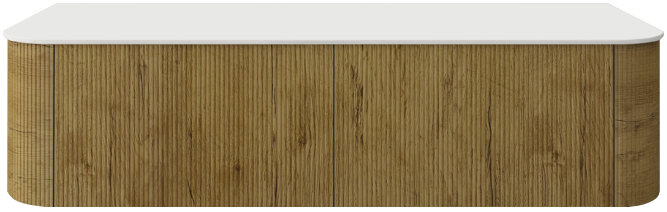

1500mm

Vanity

Prime Oak

PO

Costal Oak

CO

Stone Top

Blank White

QST
(Quartz)

Nero Maquina

Carrara White

MST
(Marble)

750mm

KC75W-PO/CO	$ 1385
+ stone top	
- QST	$ 1690
- MST	$ 1839

900mm

KC95W-PO/CO	$ 1519
+ stone top	
- QST	$ 1849
- MST	$ 1939

1200mm

KC125W-PO/CO	$ 1935
+ stone top	
- QST	$ 2329
- MST	$ 2419

1500mm

KC155W-PO/CO	$ 2390
+ stone top	
- QST	$ 2889
- MST	$ 2969

BRIGHTON

460(D)x860(H)mm

Customize your space with Brighton, the free-standing variation of Brindabella. Get connected with a distinct aesthetic with solid wood legs, Soft-closing Finger Pull drawers, and convenient storage solutions.

600mm

750mm

900mm

1200mm

1200 Double

1500mm

Vanity

Matte White — MW

Matte Black — MB

Ceramic Top

Gloss White — CT

Stone Top

Blank White — QST (Quartz)

Nero Maquina — MST (Marble)

Carrara White — MST (Marble)

Please visit our website for more top options

600mm

CB64L-MW/MB	$ 468
+ ceramic top	
- CT	$ 550
+ stone top	
- QST	$ 715
- MST	$ 815

750mm

CB74LL-MW/MB CB74RL-MW/MB	$ 689
+ ceramic top	
- CT	$ 789
+ stone top	
- QST	$ 952
- MST	$ 1070

900mm

C94LL-MW/MB CB94RL-MW/MB	$ 778
+ ceramic top	
- CT	$ 888
+ stone top	
- QST	$ 1053
- MST	$ 1190

1200mm

CB124LL-MW/MB CB124RL-MW/MB	$ 1038
+ ceramic top	
- CT	$ 1248
+ stone top	
- QST	$ 1382
- MST	$ 1492

1200mm

CB124DL-MW/MB	$ 1038
+ ceramic top	
- DBCT	$ 1293
+ stone top	
- DBQST	$ 1438
- DBMST	$ 1532

1500mm

CB154L-MW/MB	$ 1205
+ ceramic top	
- CT	$ 1845
- DBCT	$ 1898
+ stone top	
- QST	$ 1540
- MST	$ 1760
- DBQST	$ 1690
- DBMST	$ 1852

BRINDABELLA

455(D)x480(H)mm

For those seeking a touch of luxury, the Brindabella collection offers premium waterproof PVC wall hung cabinetry with soft-closing and finger pull doors and drawers, providing convenient storage. Choose from two colors and pair it with your preferred ceramic basin for a bespoke addition to your bathroom.

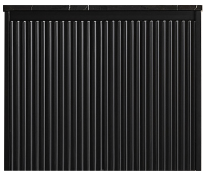

600mm

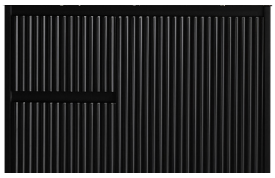

750mm

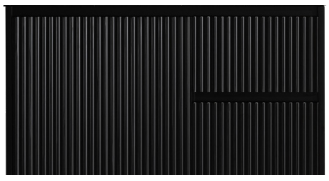

900mm

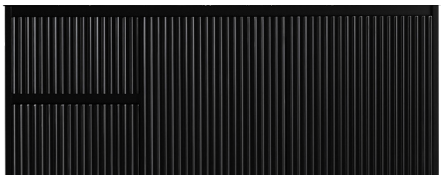

1200mm

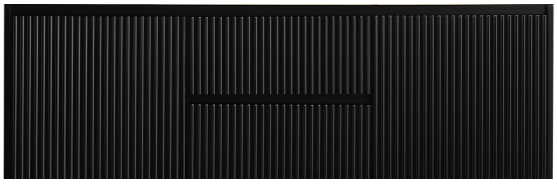

1200/1500mm - Single / Double

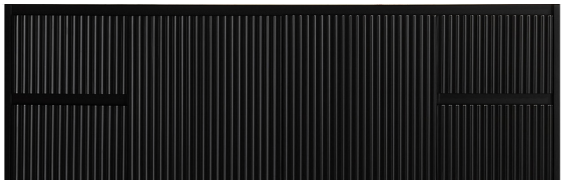

1500mm

Vanity

Matte White — MW

Matte Black — MB

Ceramic Top

Gloss White — CT

Stone Top

Blank White — QST (Quartz)

Nero Maquina — MST (Marble)

Carrara White

Please visit our website for more top options

600mm

CB64W-MW/MB	$ 430
+ ceramic top	
-CT	$ 515
+ stone top	
-QST	$ 686
-MST	$ 798

750mm

CB74LW-MW/MB	
CB74RW-MW/MB	$ 639
+ ceramic top	
-CT	$ 739
+ stone top	
-QST	$ 905
-MST	$ 1025

900mm

CB94LW-MW/MB	
CB94RW-MW/MB	$ 709
+ ceramic top	
- CT	$ 829
+ stone top	
-QST	$ 985
-MST	$ 1120

1200mm

CB124LW-MW/MB	
CB124RW-MW/MW	$ 979
+ ceramic top	
- CT	$ 1199
+ stone top	
-QST	$ 1335
-MST	$ 1445

1200mm

CB1221W-MW	
CB1221W-MB	$ 979
+ ceramic top	
- CT	$ 1199
- DBCT	$ 1299
+ stone top	
-QST	$ 1335
-MST	$ 1445
-DBQST	$ 1390
-DBMST	$ 1484

1500mm

CB1521W-MW/MB	
CB154W-MW/MB	$ 1089
+ ceramic top	
- CT	$ 1729
- DBCT	$ 1779
+ stone top	
-QST	$ 1485
-MST	$ 1649
-DBQST	$ 1539
-DBMST	$ 1685

HARINGTON

460(D)x860(H)mm

Meet our Hamptons-inspired elegance: the Harrington Freestanding PVC Vanity. This piece embodies classic design, offering customizable handle options for perfect color coordination, redefining the modern timeless aesthetic in your bathroom.

600mm

750mm

900mm

1200mm

1200 Double

1500mm

Vanity

Matte White — MW

Matte Black — MB

Ceramic Top

Gloss White — CT

Stone Top

Blank White — QST (Quartz)

Nero Maquina — MST (Marble)

Carrara White — MST (Marble)

Please visit our website for more top options

600mm

CH64L-MW/MB	$ 495
+ ceramic top	
- CT	$ 578
+ stone top	
- QST	$ 743
- MST	$ 853

750mm

CH74LL-MW/MB CH74RL-MW/MB	$ 715
+ ceramic top	
- CT	$ 815
+ stone top	
- QST	$ 979
- MST	$ 1098

900mm

CH94LL-MW/MB CH94RL-MW/MB	$ 805
+ ceramic top	
- CT	$ 915
+ stone top	
- QST	$ 1080
- MST	$ 1218

1200mm

CH124LL-MW/MB CH124RL-MW/MB	$ 1065
+ ceramic top	
- CT	$ 1265
+ stone top	
- QST	$ 1409
- MST	$ 1519

1200mm

CH124DL-MW/MB	$ 1065
+ ceramic top	
- DBCT	$ 1320
+ stone top	
- DBQST	$ 1465
- DBMST	$ 1559

1500mm

CH154L-MW/MB	$ 1229
+ ceramic top	
- CT	$ 1869
- DBCT	$ 1925
+ stone top	
- QST	$ 1568
- MST	$ 1788
- DBQST	$ 1719
- DBMST	$ 1879

KIRRIBILLI

460(D)x480(H)mm

For a contemporary architectural style, the Kirribilli PVC wall hung collection features a sleek design with a push-open drawer and shelf for added convenience. Offering ample storage space, it leaves a remarkable WOW factor in your bathroom.

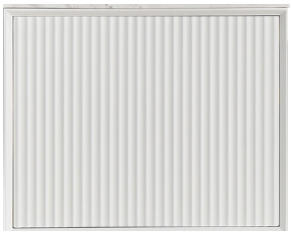

600mm

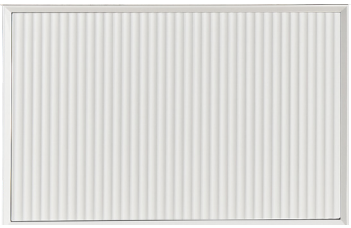

750mm

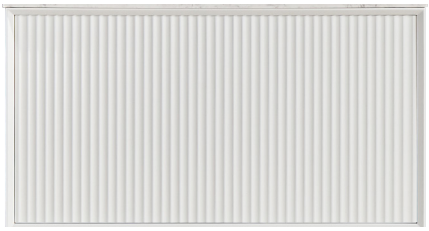

900mm

1200mm

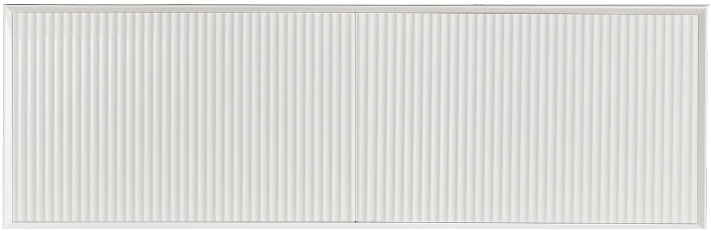

1500mm

Vanity

Matte White

MW

Matte Black

MB

Ceramic Top

Gloss White

CT

Stone Top

Blank White

QST (Quartz)

Nero Maquina

Carrara White

MST (Marble)

Please visit our website for more top options

600mm

CK600W-MW/MB	$ 585
+ ceramic top	
- CT	$ 680
+ stone top	
-QST	$ 832
-MST	$ 942

750mm

CK750W-MW/MB	$ 660
+ ceramic top	
- CT	$ 750
+ stone top	
-QST	$ 832
-MST	$ 942

900mm

CK900W-MW/MB	$ 729
+ ceramic top	
- CT	$ 849
+ stone top	
-QST	$ 1098
-MST	$ 1142

1200mm

CK1200W-MW/MB	$ 919
+ ceramic top	
- CT	$ 1139
- DBCT	$ 1189
+ stone top	
-QST	$ 1275
-MST	$ 1385
-DBQST	$ 1330
-DBMST	$ 1423

1500mm

CK1500W-MW/MB	$ 1149
+ ceramic top	
- CT	$ 1789
- DBCT	$ 1849
+ stone top	
-QST	$ 1550
-MST	$ 1718
-DBQST	$ 1598
-DBMST	$ 1745

ACACIA Wall Hung

460(D)x580(H)mm

Experience the superior quality of Acacia wall hung and floor standing vanity,expertly crafted from fully waterproof PVC. Enjoy the tranquility of soft-closing undermount drawer runners, ensuring whisper-quiet and smooth operation. Combining style and functionality in one elegant package.

600mm

750mm

900mm

1200mm

1200mm

1500mm

Vanity

Matte White — MW

Matte Black — MB

Ceramic Top

Gloss White — CT

Stone Top

Blank White — QST (Quartz)

Nero Maquina — MST (Marble)

Carrara White — MST (Marble)

Please visit our website for more top options

600mm

AC64W-MW/MB	$ 415
+ ceramic top	
- CT	$ 505
+ stone top	
- QST	$ 660
- MST	$ 770

750mm

AC74LW-MW/MB	
AC74RW-MW/MB	$ 514
+ ceramic top	
- CT	$ 615
+ stone top	
- QST	$ 779
- MST	$ 899

900mm

AC94LW-MW/MB	
AC94RW-MW/MB	$ 642
+ ceramic top	
- CT	$ 760
+ stone top	
- QST	$ 917
- MST	$ 1054

1200mm

AC124W-MW/MB	$ 843
+ ceramic top	
- CT	$ 1063
+ stone top	
- QST	$ 1200
- MST	$ 1310

1200mm

AC124DW-MW/MB	$ 825
+ ceramic top	
- DBCT	$ 1090
+ stone top	
- DBQST	$ 1238
- DBMST	$ 1329

1500mm

AC154W-MW/MB	$ 990
+ ceramic top	
- CT	$ 1632
- DBCT	$ 1705
+ stone top	
- QST	$ 1385
- MST	$ 1549
- DBQST	$ 1439
- DBMST	$ 1585

ACACIA

460(D)x860(H)mm

Experience the superior quality of Acacia wall hung and floor standing vanity,expertly crafted from fully waterproof PVC. Enjoy the tranquility of soft-closing undermount drawer runners, ensuring whisper-quiet and smooth operation. Combining style and functionality in one elegant package.

600mm

750mm

900mm

1200mm

1200 Double

1500mm

Vanity

Matte White — MW

Matte Black — MB

Ceramic Top

Gloss White — CT

Stone Top

Blank White — QST (Quartz)

Nero Maquina — MST (Marble)

Carrara White — MST (Marble)

Please visit our website for more top options

600mm

AC64L-MW/MB	$ 431
+ ceramic top	
- CT	$ 523
+ stone top	
- QST	$ 678
- MST	$ 788

750mm

AC74LL-MW/MB AC74RL-MW/MB	$ 532
+ ceramic top	
- CT	$ 651
+ stone top	
- QST	$ 883
- MST	$ 977

900mm

AC94LL-MW/MB AC94RL-MW/MB	$ 660
+ ceramic top	
- CT	$ 779
+ stone top	
- QST	$ 1035
- MST	$ 1186

1200mm

AC124L-MW/MB	$ 853
+ ceramic top	
- CT	$ 1073
+ stone top	
- QST	$ 1337
- MST	$ 1458

1200mm

AC124DL-MW/MB	$ 816
+ ceramic top	
- DBCT	$ 1073
+ stone top	
- DBQST	$ 1358
- DBMST	$ 1458

1500mm

AC154L-MW/MB	$ 990
+ ceramic top	
- CT	$ 1632
- DBCT	$ 1705
+ stone top	
- QST	$ 1530
- MST	$ 1711
- DBQST	$ 1590
- DBMST	$ 1752

FREMANTLE

460(D)x560(H)mm

A masterpiece of premium-quality wall hung PVC, exuding captivating Hampton style. Its waterproof design guarantees timeless beauty in any environment. Embrace the effortless functionality of soft-close drawer runners and the convenience of easy finger pull access.

600mm

750mm

900mm

1200mm

1500mm

Vanity

Matte White — W

Matte Black — B

Matte Grey — G

Ceramic Top

Gloss White — CT

Stone Top

Blank White — QST (Quartz)

Nero Maquina — MST (Marble)

Carrara White — MST (Marble)

Please visit our website for more top options

600mm

FMW/B/G600WH	$ 504
+ ceramic top	
- CT	$ 596
+ stone top	
-QST	$ 752
-MST	$ 862

750mm

FMW/B/G750WH	$ 578
+ ceramic top	
- CT	$ 688
+ stone top	
- QST	$ 843
- MST	$ 963

900mm

FMW/B/G900WH	$ 669
+ ceramic top	
- CT	$ 788
+ stone top	
-QST	$ 944
-MST	$ 1082

1200mm

FMW/B/G1221WH	$ 898
+ ceramic top	
- CT	$ 1118
- DBCT	$ 1164
+ stone top	
-QST	$ 1256
-MST	$ 1366
-DBQST	$ 1311
-DBMST	$ 1403

1500mm

FMW/B/G1521WH	$ 1054
+ ceramic top	
- CT	$ 1696
- DBCT	$ 1769
+ stone top	
-QST	$ 1448
-MST	$ 1613
-DBQST	$ 1503
-DBMST	$ 1650

AVALON

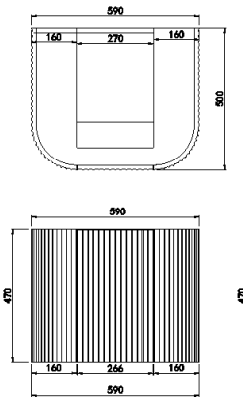

600mm

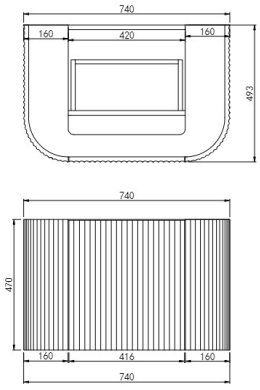

750mm

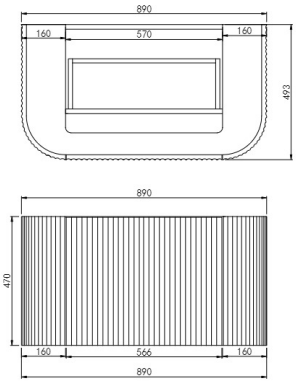

900mm

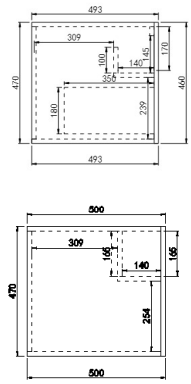

Common Side View

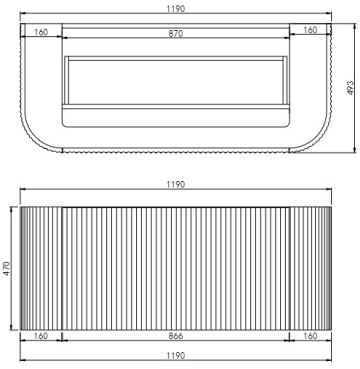

1200mm

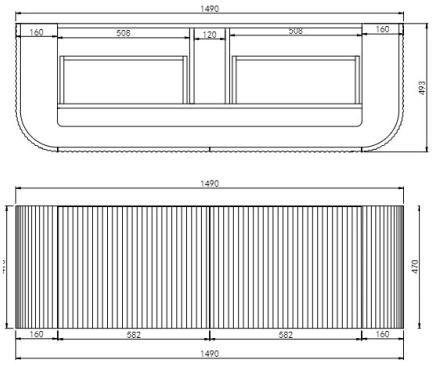

1500mm

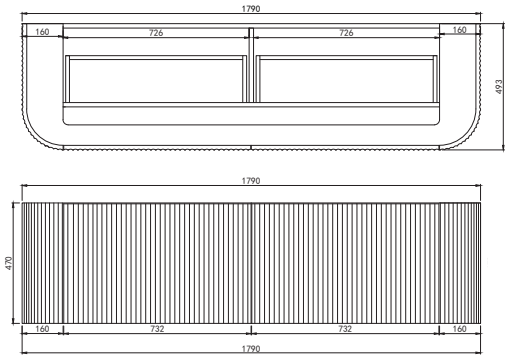

1800mm

BELLEVUE

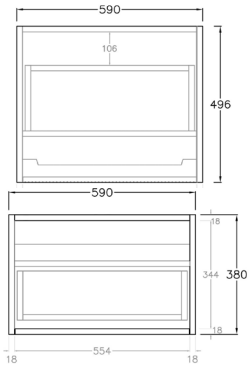

600mm

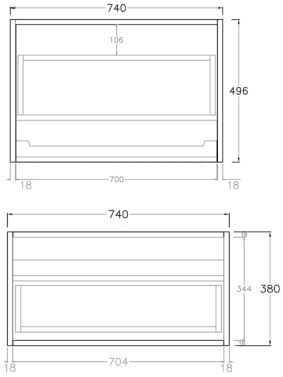

750mm

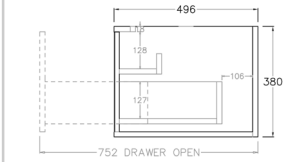

Common Side View

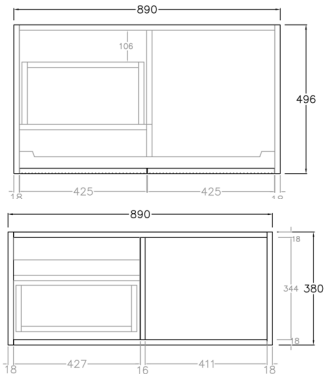

900mm

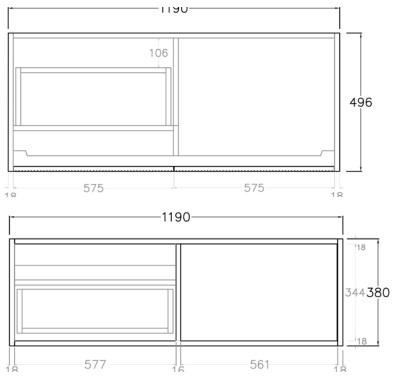

1200mm

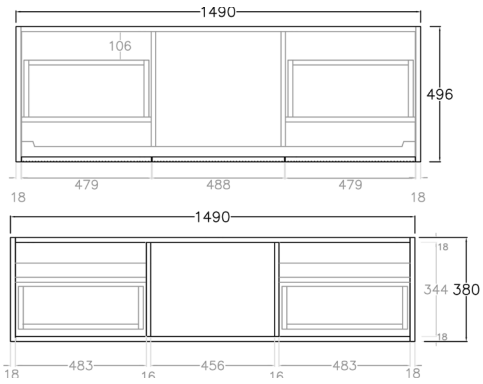

1500mm

BELLEVUE Ensuite

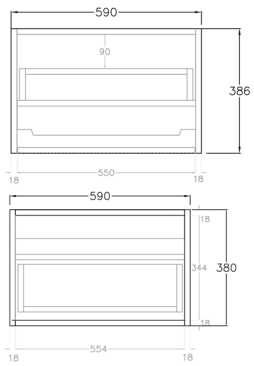

600mm

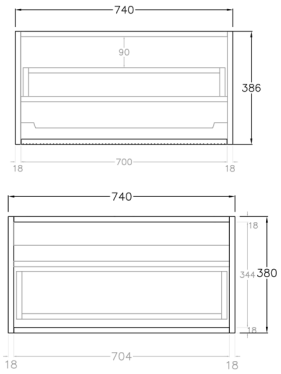

750mm

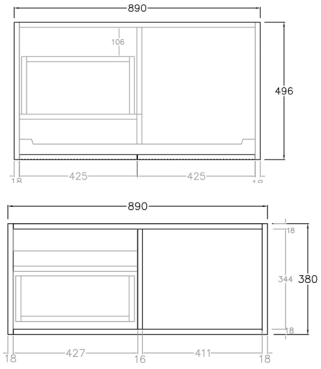

900mm

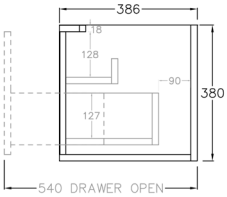

Common Side View

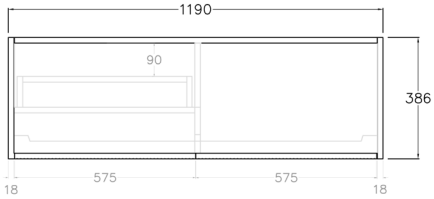

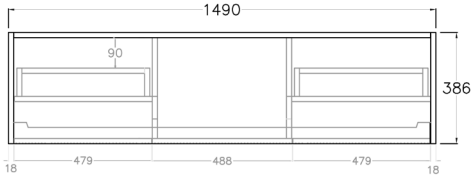

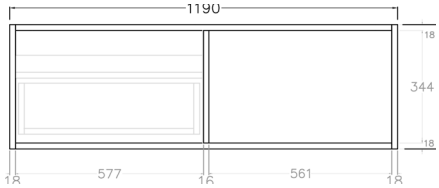

1200mm

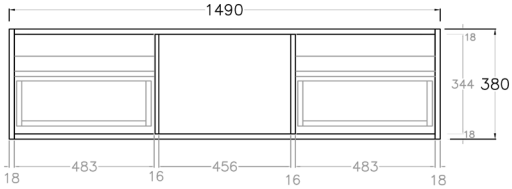

1500mm

BRONTE

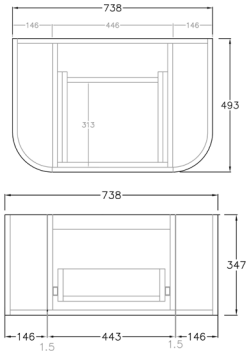

750mm

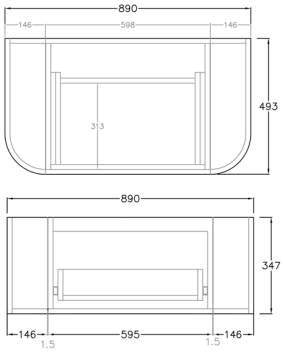

900mm

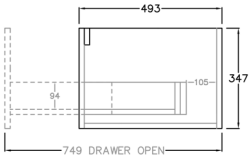

Common Side View

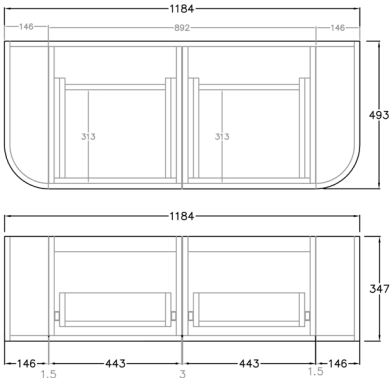

1200mm

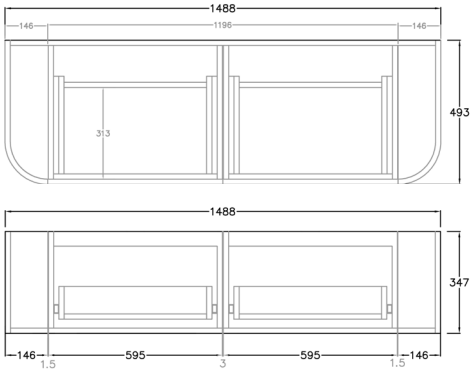

1500mm

KIRRIBILLI

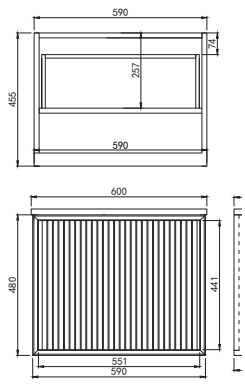

600mm

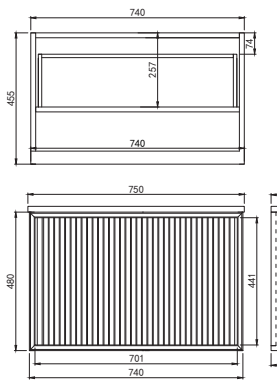

750mm

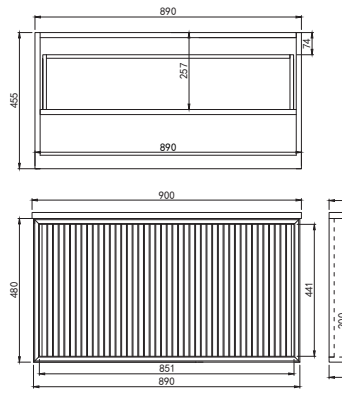

900mm

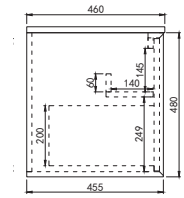

Common Side View

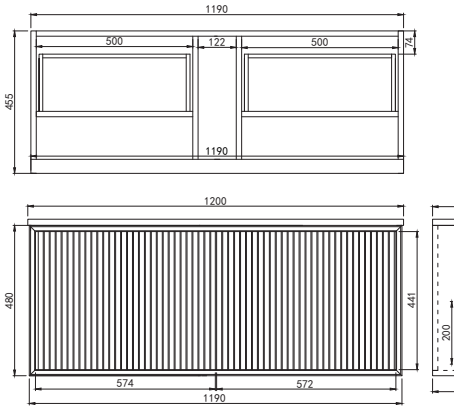

1200mm

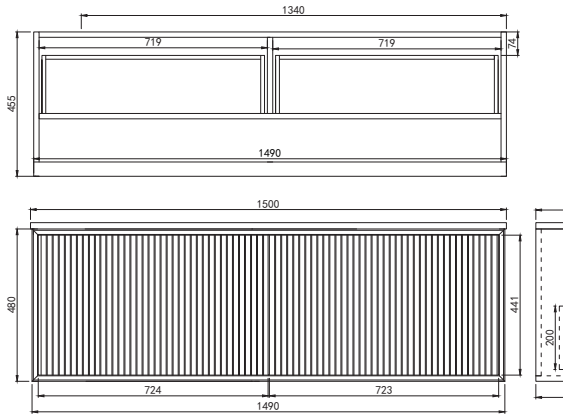

1500mm

FREMANTLE

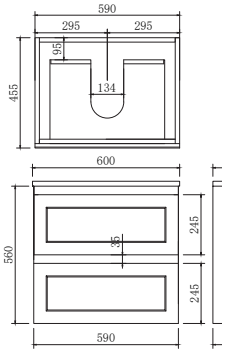

600mm

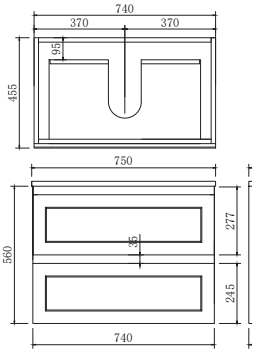

750mm

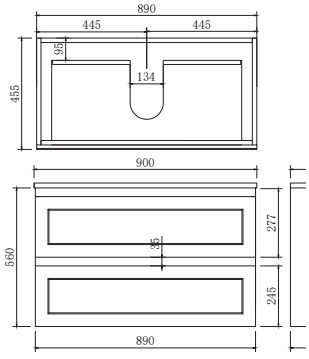

900mm

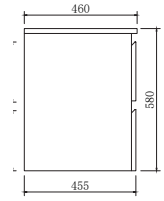

Common Side View

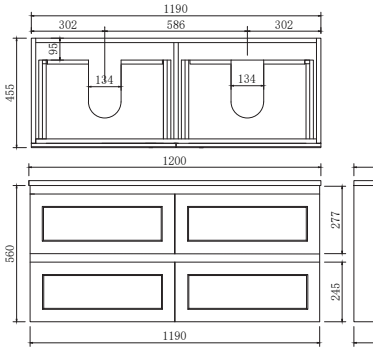

1200mm

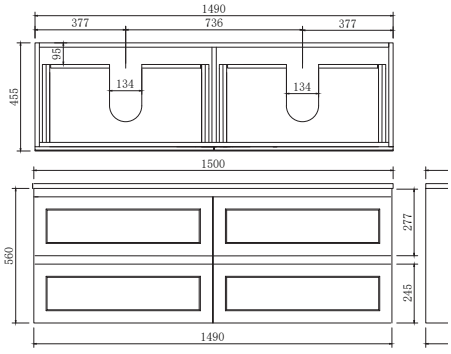

1500mm

BRIGHTON

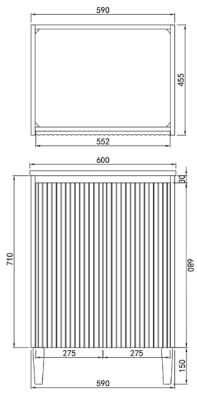

600mm

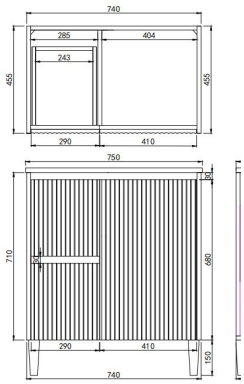

750mm

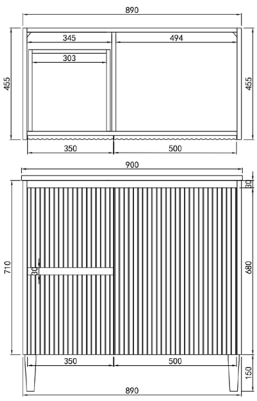

900mm

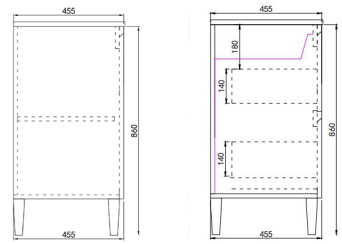

Common Side View

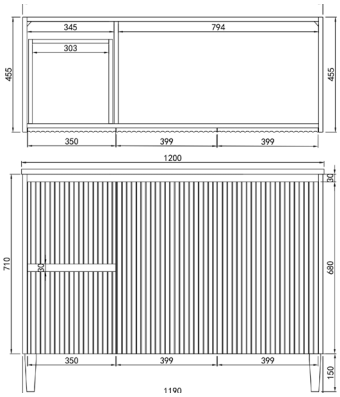

1200mm

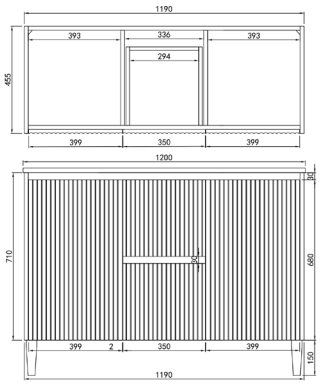

1200mm

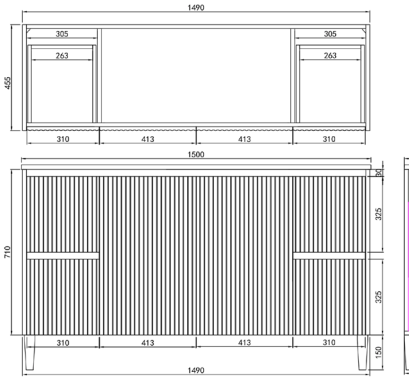

1500mm

HARRINGTON

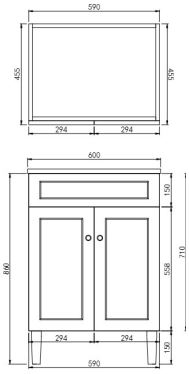

600mm

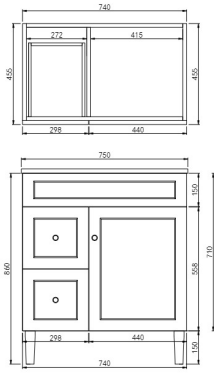

750mm

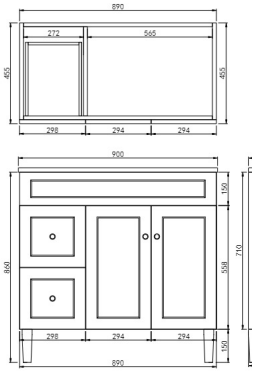

900mm

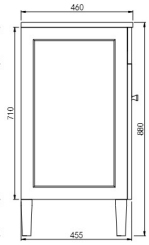

Common Side View

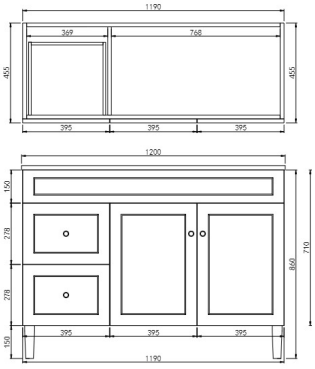

1200mm

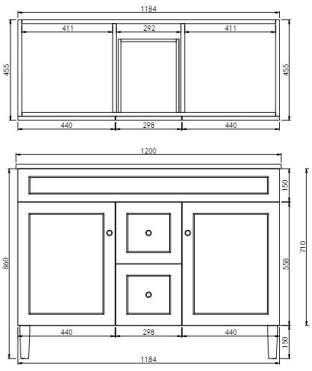

1200mm

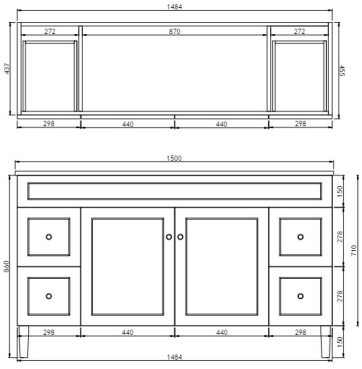

1500mm

BRINDABELLA

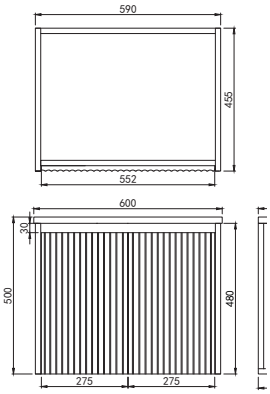

600mm

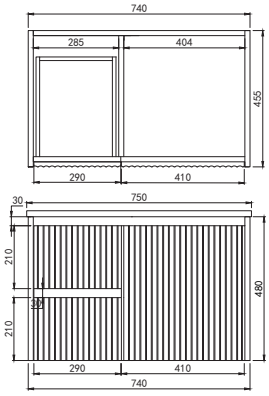

750 Left / Right Drawers

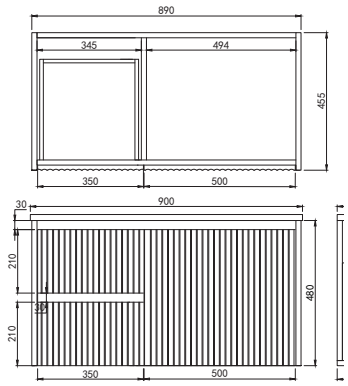

900 Left / Right Drawers

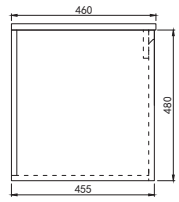

Common Side View

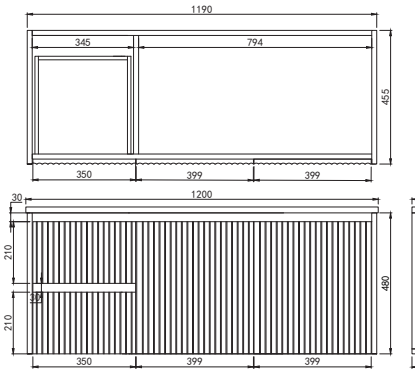

1200 Left / Right Drawers

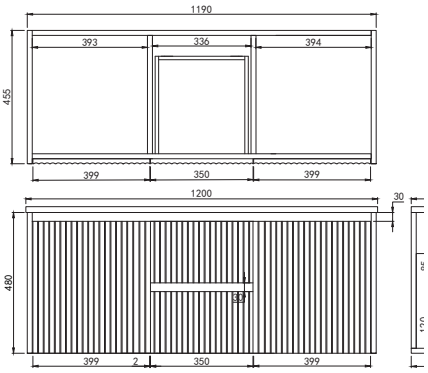

1200 Double

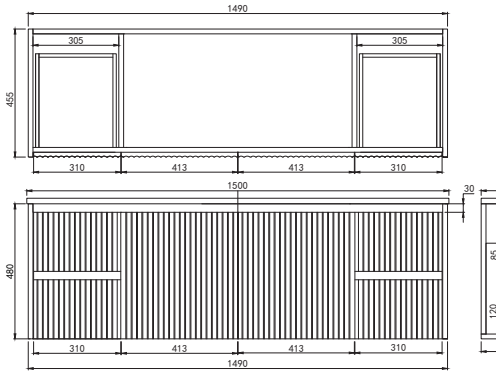

1500mm

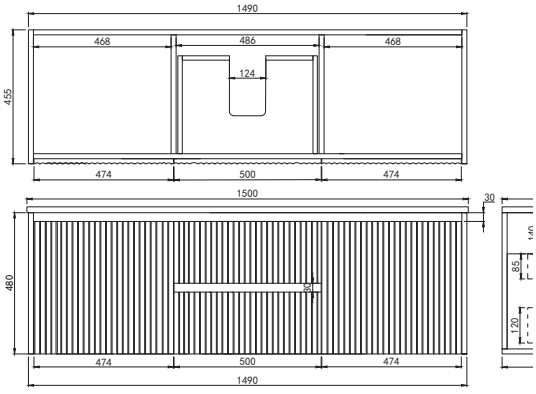

1500 Double

ACACIA Wall Hung

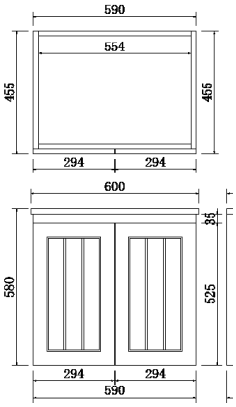

600mm

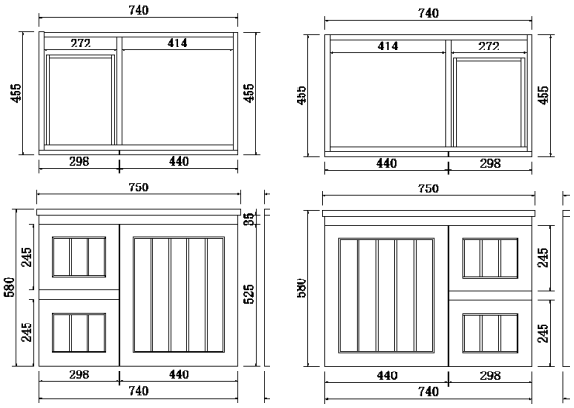

750mm

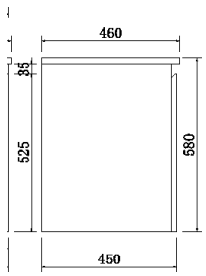

Acacia Standard Side View

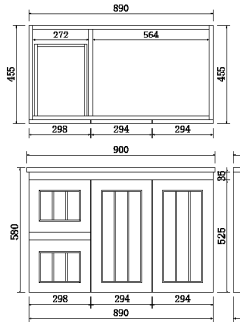

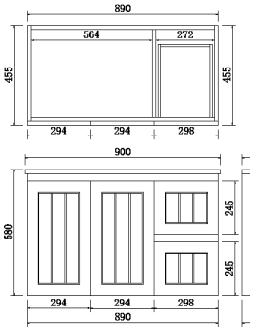

900mm

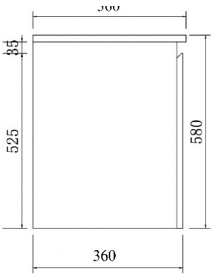

Acacia Slim Side View

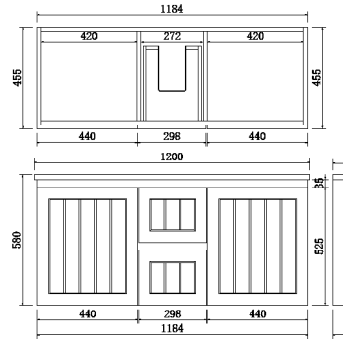

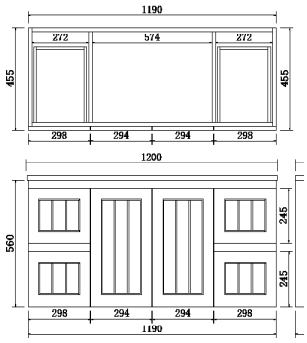

1200mm

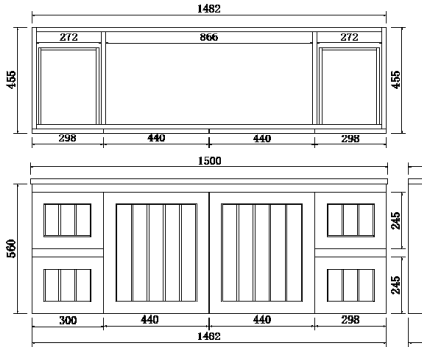

1500mm

ACACIA

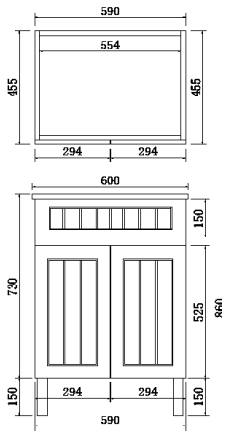

600mm

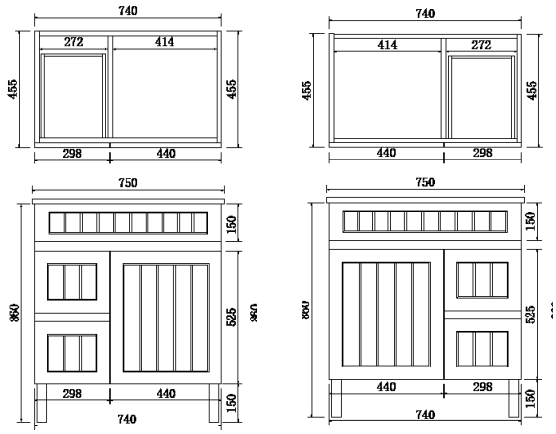

750mm

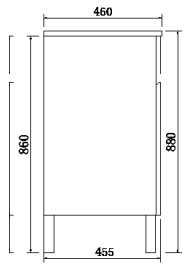

Acacia Standard Side View

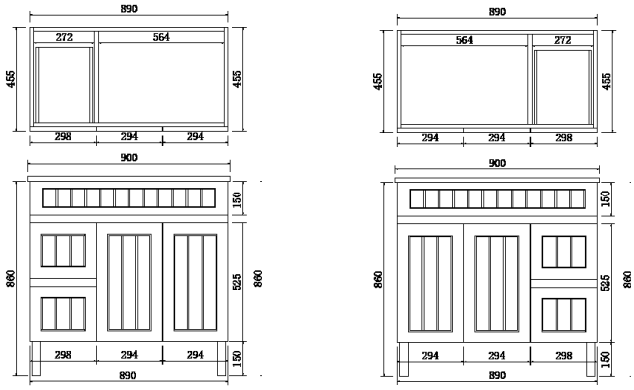

900mm

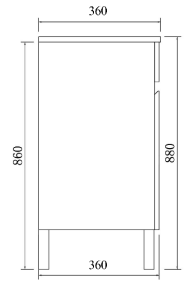

Acacia Slim Side View

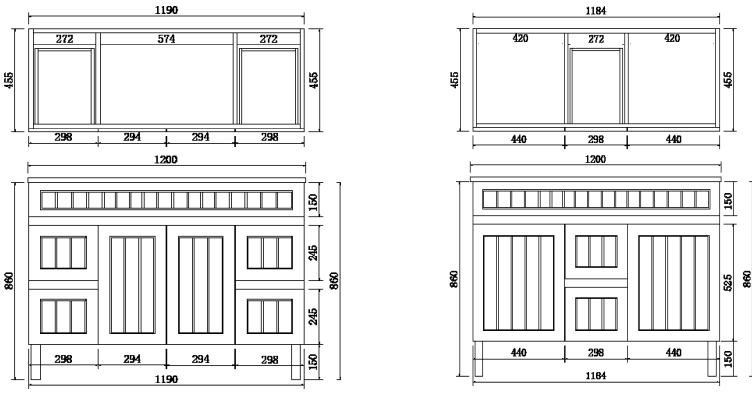

1200mm

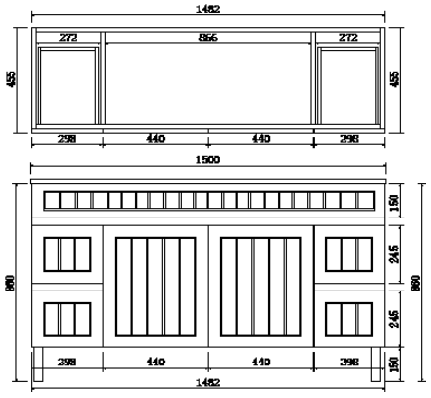

1500mm

VANITY TOP

SOLID SURFACE TOP - CALACATTA

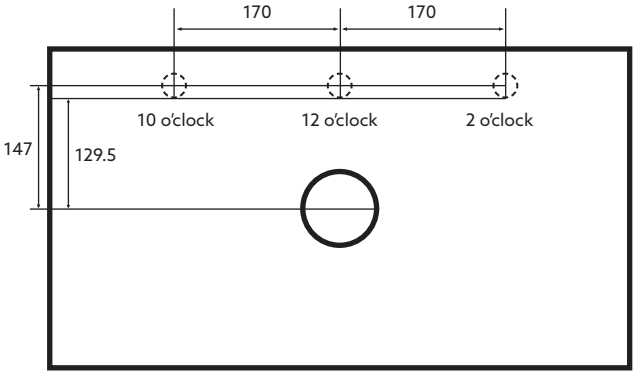

Quarter Drilled Tap Hole 35mm at Back

Drilled Through Waste Hole 100mm

Slim

395*12mm

SCA639-UTH	———	600mm	$300
SCA739-UTH	———	750mm	$350
SCA939-UTH	SCA939	900mm	$385
SCA1239-UTH	SCA1239	1200mm	$475
SCA1239D-UTH	———	1200mm	$475
SCA1539-UTH	SCA1539	1500mm	$575
SCA1539D-UTH	———	1500mm	$575

Rregular

460*12mm

SCA64-UTH	———	600mm	$315
SCA74-UTH	———	750mm	$359
SCA94-UTH	SCA94	900mm	$410
SCA124-UTH	SCA124	1200mm	$489
SCA124D-UTH	———	1200mm	$489
SCA154-UTH	SCA154	1500mm	$599
SCA154D-UTH	———	1500mm	$599

Wide

505*12mm

SCA65-UTH	———	600mm	$325
SCA75-UTH	———	750mm	$365
SCA95-UTH	SCA95	900mm	$425
SCA125-UTH	SCA125	1200mm	$505
SCA125D-UTH	———	1200mm	$505
SCA155-UTH	SCA155	1500mm	$615
SCA155D-UTH	———	1500mm	$615

Curved

505*12mm

SCA65CV-UTH	———	600mm	$359
SCA75CV-UTH	SCA75CV	750mm	$399
SCA95CV-UTH	SCA95CV	900mm	$459
SCA125CV-UTH	SCA125CV	1200mm	$539
SCA125CVD-UTH	———	1200mm	$539
SCA155CV-UTH	SCA155CV	1500mm	$645
SCA155CVD-UTH	———	1500mm	$645
SCA185CVD-UTH	SCA185CV	1800mm	$800

SOLID SURFACE TOP - NIGHT SKY

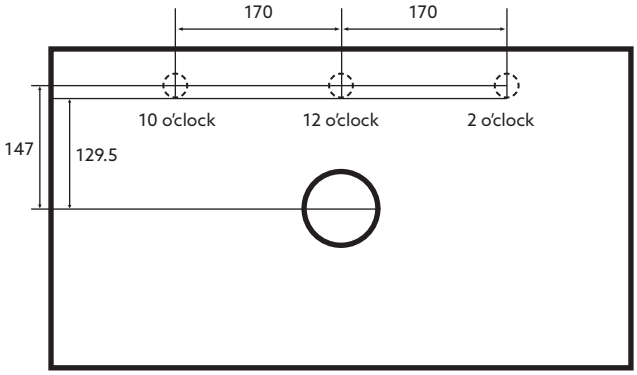

Quarter Drilled Tap Hole 35mm at Back

Drilled Through Waste Hole 100mm

Slim

395*12mm

SNS639-UTH	———	600mm	$300
SNS739-UTH	———	750mm	$350
SNS939-UTH	SNS939	900mm	$385
SNS1239-UTH	SNS1239	1200mm	$475
SNS1239D-UTH	———	1200mm	$475
SNS1539-UTH	SNS1539	1500mm	$575
SNS1539D-UTH	———	1500mm	$575

Rregular

460*12mm

SCA64-UTH	———	600mm	$315
SCA74-UTH	———	750mm	$359
SCA94-UTH	SNS94	900mm	$410
SCA124-UTH	SNS124	1200mm	$489
SCA124D-UTH	———	1200mm	$489
SCA154-UTH	SNS154	1500mm	$599
SCA154D-UTH	———	1500mm	$599

Wide

505*12mm

SNS65-UTH	———	600mm	$325
SNS75-UTH	———	750mm	$365
SNS95-UTH	SNS95	900mm	$425
SNS125-UTH	SNS125	1200mm	$505
SNS125D-UTH	———	1200mm	$505
SNS155-UTH	SNS155	1500mm	$615
SNS155D-UTH	———	1500mm	$615

Curved

505*12mm

SNS65CV-UTH	———	600mm	$359
SNS75CV-UTH	SNS75CV	750mm	$399
SNS95CV-UTH	SNS95CV	900mm	$459
SNS125CV-UTH	SNS125CV	1200mm	$539
SNS125CVD-UTH	———	1200mm	$539
SNS155CV-UTH	SNS155CV	1500mm	$645
SNS155CVD-UTH	———	1500mm	$645
SNS185CVD-UTH	SNS185CV	1800mm	$800

SOLID SURFACE TOP - MATTE WHITE

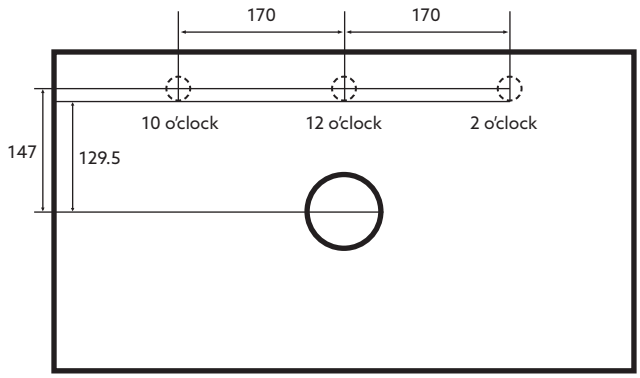

Quarter Drilled Tap Hole 35mm at Back

Drilled Through Waste Hole 100mm

Slim

395*12mm

PSBW639-UTH	PSBW639	600mm	$289
PSBW739-UTH	PSBW739	750mm	$319
PSBW939-UTH	PSBW939	900mm	$365
PSBW1239-UTH	PSBW1239	1200mm	$429
PSBW1539-UTH	PSBW1539	1500mm	$539
PSBW1539D-UTH	———	1500mm	$539

Rregular

460*12mm

PSBW64-UTH	PSBW64	600mm	$299
PSBW74-UTH	PSBW74	750mm	$330
PSBW94-UTH	PSBW94	900mm	$365
PSBW124-UTH	PSBW124	1200mm	$440
PSBW124D-UTH	———	1200mm	$440
PSBW154-UTH	PSBW154	1500mm	$550
PSBW154D-UTH	———	1500mm	$550
PSBW184D-UTH	PSBW184	1800mm	$595

Wide

505*12mm

PSBW65-UTH	PSBW65	600mm	$310
PSBW75-UTH	PSBW75	750mm	$345
PSBW95-UTH	PSBW95	900mm	$375
PSBW125-UTH	PSBW125	1200mm	$465
PSBW125D-UTH	———	1500mm	$465
PSBW155-UTH	PSBW155	1500mm	$565
PSBW155D-UTH	———	1500mm	$565

Curved

505*12mm

PSBW65CV-UTH	PSBW65CV	600mm	$330
PSBW75CV-UTH	PSBW75CV	750mm	$385
PSBW95CV-UTH	PSBW95CV	900mm	$439
PSBW125CV-UTH	PSBW125CV	1200mm	$509
PSBW125CVD-UTH	———	1200mm	$509
PSBW155CV-UTH	PSBW155CV	1500mm	$559
PSBW155CVD-UTH	———	1500mm	$559
PSBW185CVD-UTH	PSBW185CV	1800mm	$759

MARBLE STONE TOP - CARRARRA WHITE

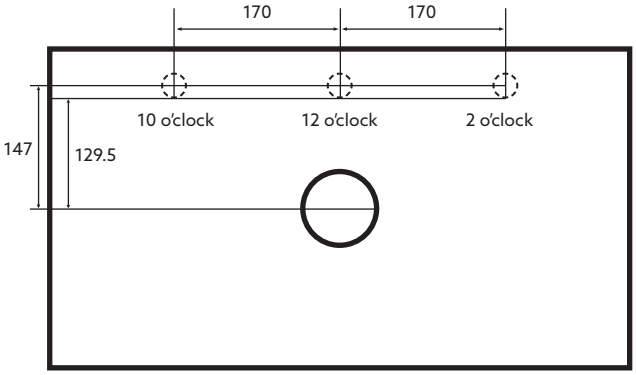

Quarter Drilled Tap Hole 35mm at Back

Drilled Through Waste Hole 100mm

Slim

395*12mm

ACar639-UTH	———	600mm	$421
ACar739-UTH	———	750mm	$450
ACar939-UTH	ACar939	900mm	$485
ACar1239-UTH	ACar1239	1200mm	$540
ACar1239D-UTH	———	1200mm	$540
ACar1539-UTH	ACar1539	1500mm	$645
ACar1539D-UTH	———	1500mm	$645

Rregular

460*12mm

ACar64-UTH	———	600mm	$495
ACar74-UTH	———	750mm	$528
ACar94-UTH	ACar94	900mm	$572
ACar124-UTH	ACar124	1200mm	$638
ACar124D-UTH	———	1200mm	$682
ACar154-UTH	ACar154	1500mm	$759
ACar154D-UTH	———	1500mm	$803

Wide

505*12mm

ACar65-UTH	———	600mm	$421
ACar75-UTH	———	750mm	$450
ACar95-UTH	ACar95	900mm	$485
ACar125-UTH	ACar125	1200mm	$540
ACar125D-UTH	———	1200mm	$540
ACar155-UTH	ACar155	1500mm	$645
ACar155D-UTH	———	1500mm	$645

Curved

505*12mm

ACar65CV-UTH	———	600mm	$439
ACar75CV-UTH	ACar75CV	750mm	$459
ACar95CV-UTH	ACar95CV	900mm	$489
ACar125CV-UTH	ACar125CV	1200mm	$579
ACar125CVD-UTH	———	1200mm	$579
ACar155CV-UTH	ACar155CV	1500mm	$669
ACar155CVD-UTH	———	1500mm	$669

DIAMOND TOP

460*50mm

600mm

750mm

900mm

1200/1500mm - Single

1200/1500mm - Double

TH - With Taphole NTH - Without Taphole

600mm

DU64-TH
DU64-NTH $ 485

750mm

DU74-TH
DU74-NTH $ 520

900mm

DU94-TH
DU94-NTH $ 550

1200mm

DU124-TH
DU124-NTH $ 605

DU124D-TH
DU124D-NTH $ 869

1500mm

DU154-TH
DU154-NTH $ 675

DU154D-TH
DU154D-NTH $ 935

Solid Surface Counter Basin - Chiefly

600mm

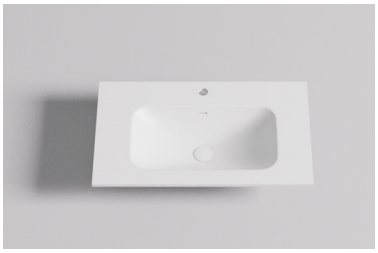

750mm

900mm

1200/1500mm - Single

1200/1500/1800mm - Double

TH - With Taphole UTH - Universal Taphole

600mm

CH6046MW-UTH	
CH6046MW-TH	$429

750mm

CH7546MW-UTH	
CH7546MW-TH	$459

900mm

CH9046MW-UTH	
CH9046MW-TH	$499

1200mm

CH1246MW-UTH	
CH1246MW-TH	$589
CH1246DMW-UTH	
CH1246DMW-TH	$649

1500mm

CH1546MW-UTH	
CH1546MW-TH	$649
CH1546DMW-UTH	
CH1546DMW-TH	$699

1800mm

CH1846GW-TH	$ 729

Shaving Cabinet

A diverse selection of mirrors designed to enhance any bathroom with a variety of styles and color choices. These mirrors showcase a refined white gloss glaze, adding a touch of sophistication. Crafted from top-tier fireclay and expertly glazed, they offer exceptional durability and resistance to thermal shock, stains, scratches, and chemicals, elevating their hygiene levels above most sink options.

Olivia LED Mirror Cabinet

The Olivia LED Mirror Cabinet offers a modern design with a convenient finger-pull soft-closing door. It features a dimmable 6000K cool white LED strip light around the mirror and an additional LED strip light inside the cabinet for enhanced visibility, providing both style and functionality to your bathroom space.

1

2

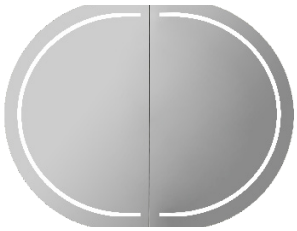

3

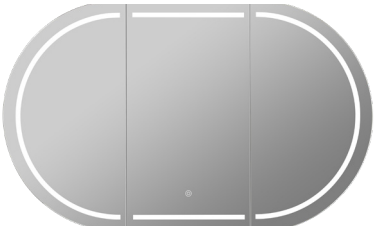

4

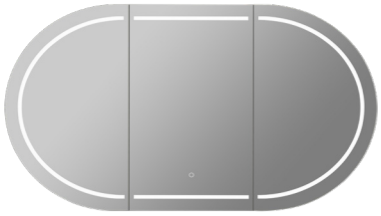

5

Colours

Matte White

MW

Matte Black

MB

Features

- 3 Finger Pull Soft-Closing Doors
- 6000K Dimmable Cool White LED Strip Light
- Inner Cabinet LED Strip Light
- Sensor-Controlled On/Off
- Up to 50,000 hours of LED life
- Power Consumption: 24W
- Input Voltage: 110-240V
- Output Voltage: 12V
- IP44 Rated Hardwired Connection

1 OARSV4590

Size 450*900*155mm

OARSV4590MW-LED
OARSV4590MB-LED $ 660

2 OPLSV6090

Size 600*900*155mm

OPLSV6090MW-LED
OPLSV6090MB-LED $ 715

3 OPLSV9060

Size 900*600*155mm

OPLSV9060MW-LED
OPLSV9060MB-LED $ 850

4 OPLSV1275

Size 1200*750*155mm

OPLSV1275MW-LED
OPLSV1275MB-LED $ 1155

5 OPLSV1580

Size 1500*800*155mm

OPLSV1580MW-LED
OPLSV1580MB-LED $ 1350

Olivia Plain Mirror Cabinet

The Olivia Plain Mirror Cabinet features an elongated design for a sleek, contemporary look, available in matte white and matte black polyurethane finishes. Its soft-close door with full-swing hinges ensures smooth operation, while the cabinet is designed for wall recessing.

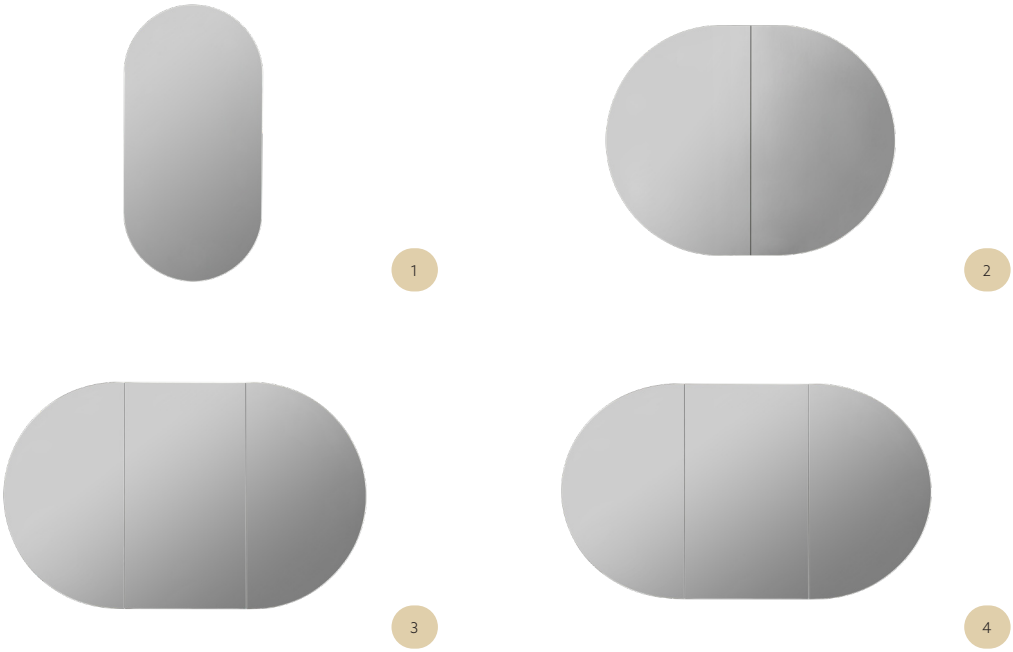

Colours

Matte White — MW

Matte Black — MB

Features

- Copper-free Mirror
- Allows for Wall Recessing
- Soft-close Door with full sing hinges

1 OARSV4590

Size 450*900*150mm

OARSV4590MW
OARSV4590MB $ 462

2 OPLSV9060

Size 900*600*150mm

OPLSV9060MW
OPLSV9060MB $ 550

3 OPLSV1275

Size 1200*750*150mm

OPLSV1275MW
OPLSV1275MB $ 715

4 OPLSV1580

Size 1500*800*150mm

OPLSV1580MW
OPLSV1580MB $ 915

Olivia Tallboy & Others

Type here

1

2

3

4

Colours

Matte White

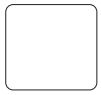

MW

Matte Black

MB

1 OSTB1500

Size 400*1500*300mm

OSTB1500MW
OSTB1500MB $ 638

2 OSV6090

Size 600*900*155mm

OSV6090MW
OSV6090MB $ 495

3 OSV4090

Size 400*900*155mm

OSV4090MW
OSV4090MW $ 429

4 OARSV6090

Size 600*900*155mm

OARSV6090MW
OARSV6090MB $ 495

Fremantle Shaving Cabinet

Type here

1

2

3

4

5

Colours

Matte White

MW

Matte Black

MB

600mm

Size 600*750*155mm

FMWSV600
FMBSV600 $ 363

750mm

Size 750*750*155mm

FMWSV750
FMBSV750 $ 429

900mm

Size 900*750*155mm

FMWSV900
FMBSV900 $ 517

1200mm

Size 1198*750*155mm

FMWSV1200
FMBSV1200 $ 627

1500mm

Size 1480*750*155mm

FMWSV1500
FMBSV1500 $ 737

OLIVIA LED MIRROR CABINET

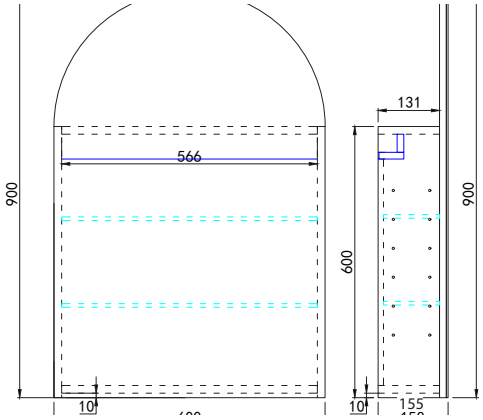

OARSV6090

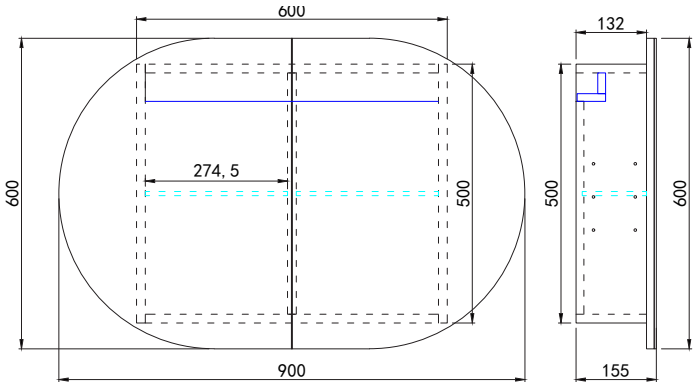

OPLSV9060

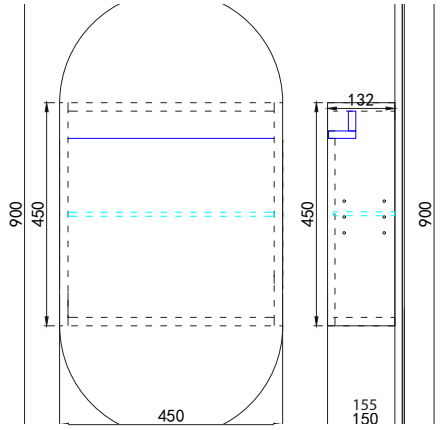

OPLSV4590

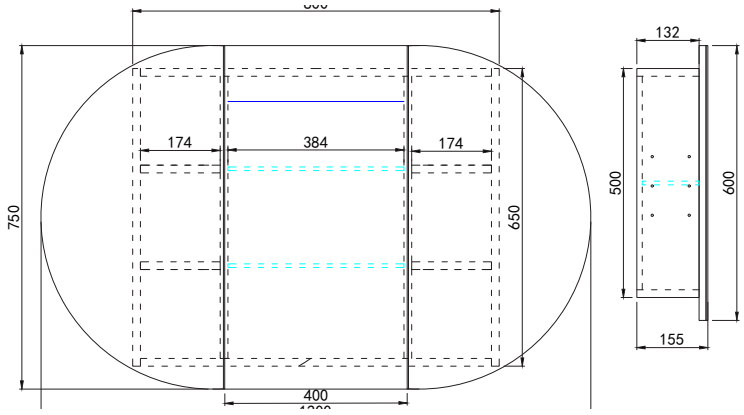

OPLSV1275

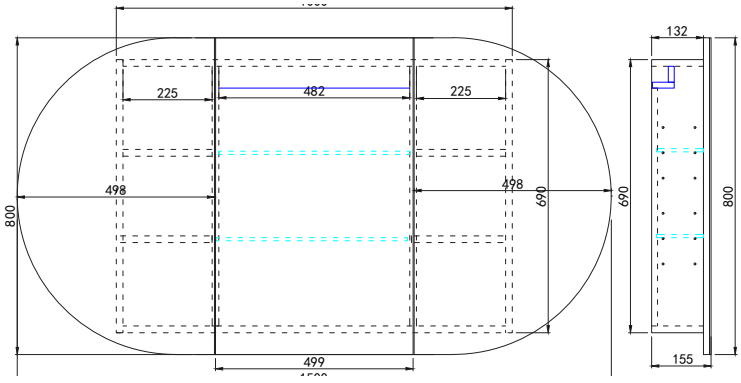

OPLSV1580

OLIVIA PLAIN MIRROR CABINET

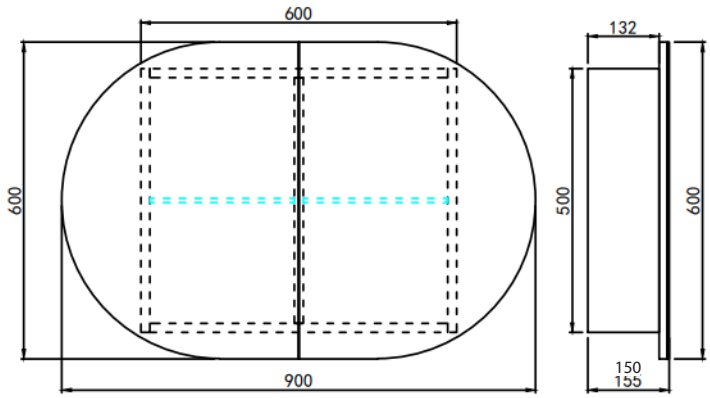

OPLSV9060

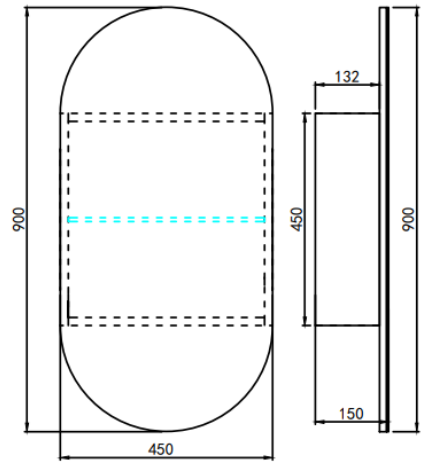

OPLSV4590

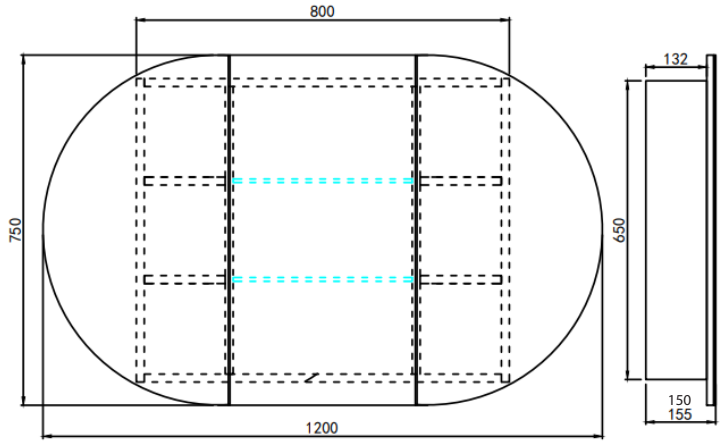

OPLSV1275

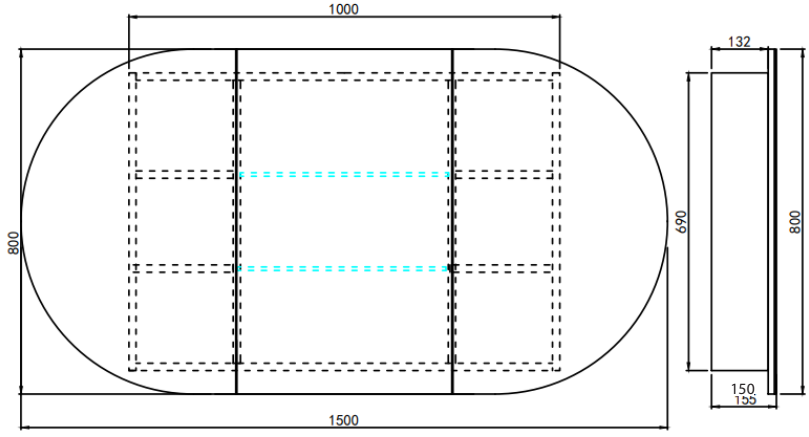

OPLSV1580

OLIVIA TALLBOY & OTHERS

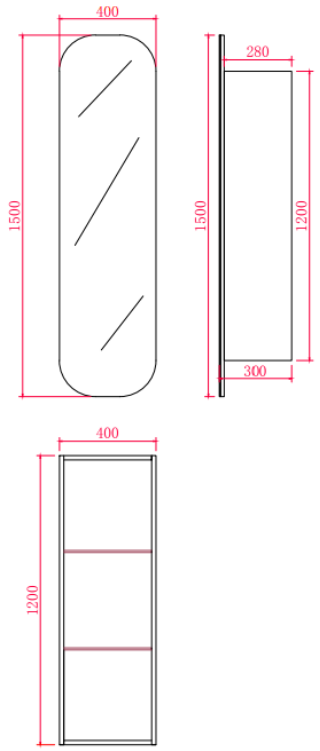

OSTB1500

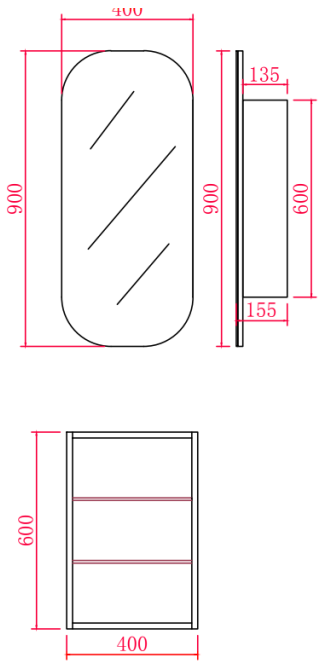

OSV4090

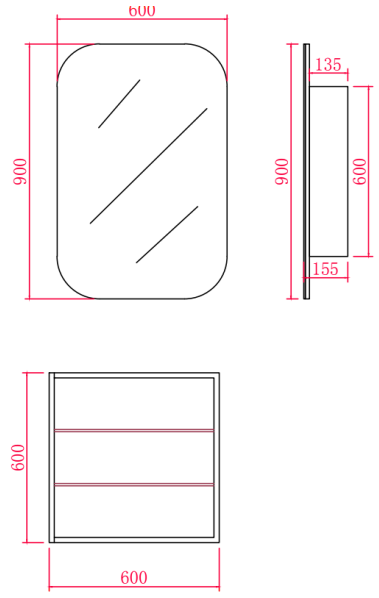

OSV6090

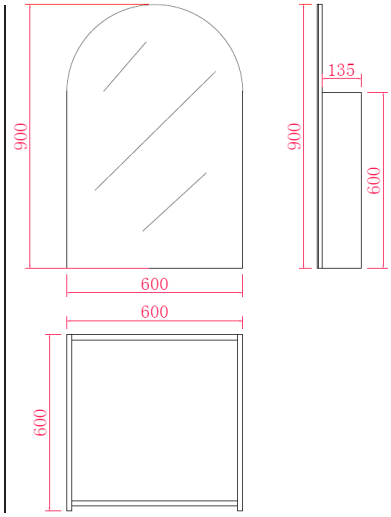

OARSV6090

FREEMANTLE SHAVING CABINET

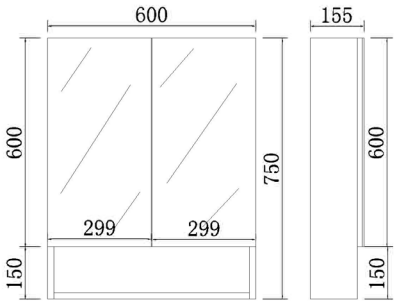

600mm

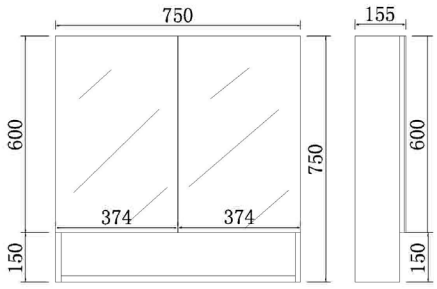

750mm

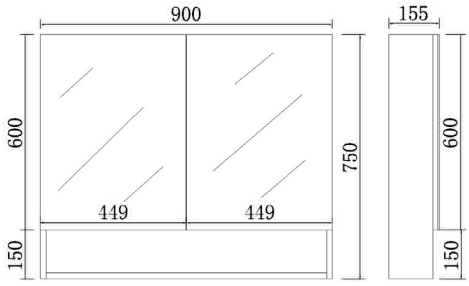

900mm

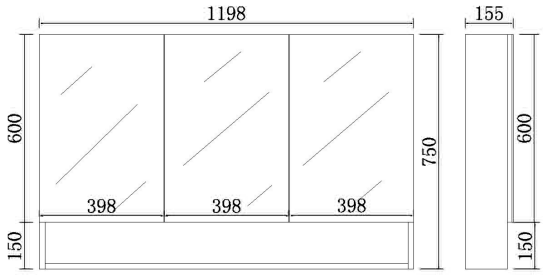

1200mm

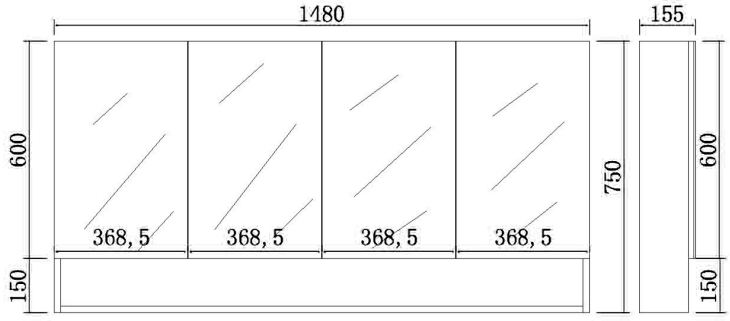

1500mm

CETO Basin

Unique, elegant and refined

Drawing inspiration from Mediterranean style, CETO basin collections featuring contemporary designs that artfully blend an array of styles, shapes, and colors with distinctive textures and finishes. Achieve a distinctive and stylish atmosphere in your bathroom while ensuring optimal functionality and efficiency.

Elba

The Elba is a minimalist square above-counter basin, crafted from high-quality solid surface material. Its clean, understated design complements any bathroom aesthetic, offering both style and long-lasting durability.

Basin

Matte White

MW

400mm

Size	400*400*140mm
CE4040MW	$399

Kirkby

The Elba is a minimalist oval above-counter basin, crafted from high-quality solid surface material. Its clean, understated design complements any bathroom aesthetic, offering both style and long-lasting durability.

Basin

Matte White

MW

580mm

Size	580*380*140mm
CE5838MW	$399

Percy

The Percy is a minimalist rectangular above-counter basin, expertly crafted from high-quality solid surface material. Available in two size. Its clean, understated design complements any bathroom aesthetic, offering both style and long-lasting durability.

Basin

Matte White

MW

550mm

Size 550*400*155mm

CE5540MW $399

630mm

Size 630*360*150mm

CE6336MW $399

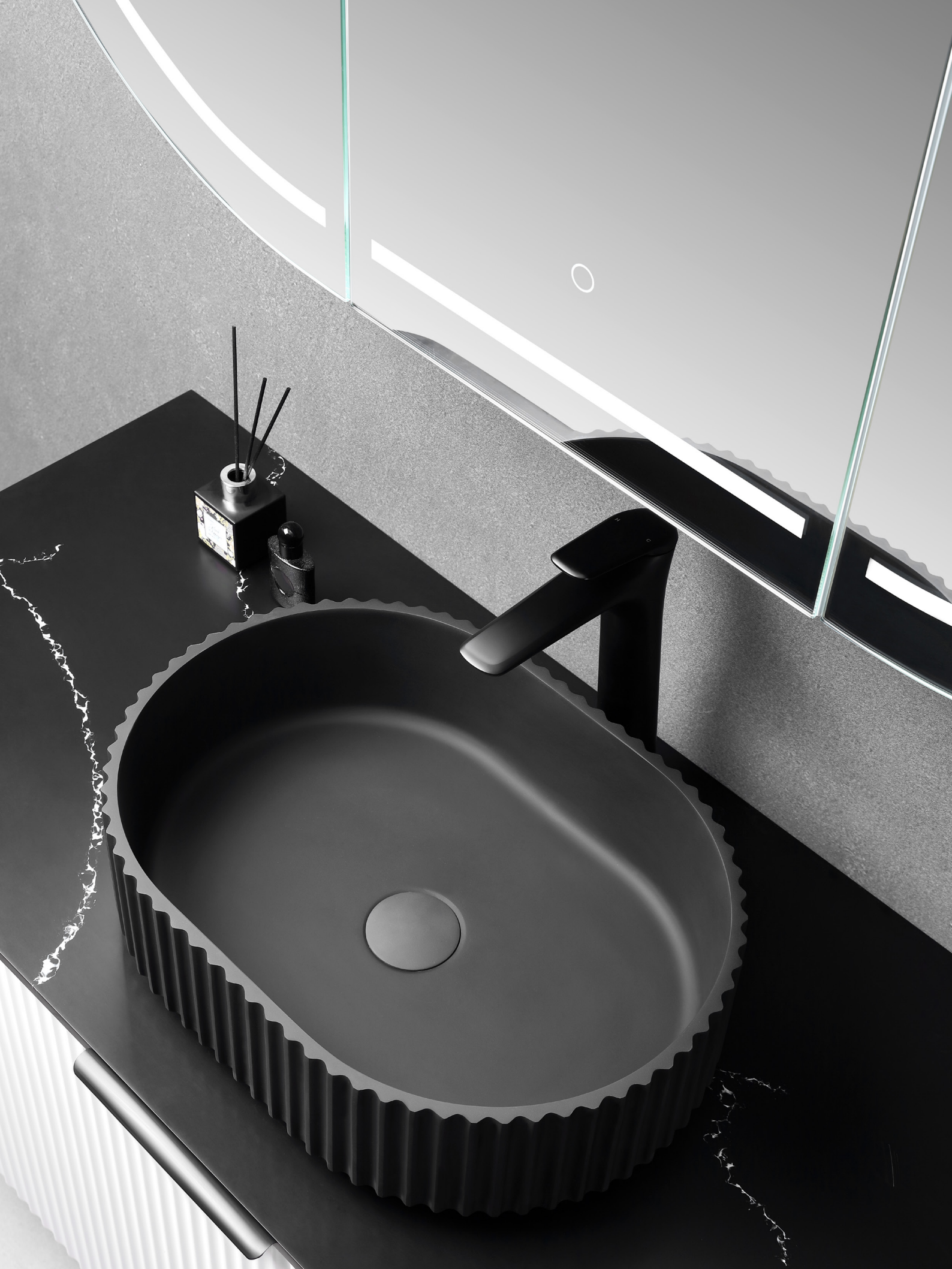

Ally

Introducing the Ally, an elegant above counter solid surface basin crafted with convenience in mind. Made from premium stone, this basin comes in two beautiful colors, creating a seamless blend of form and function.

Basin

Gloss White	Matte White	Matte Black
GW	MW	MB

600mm

Size 600*370*210mm

CA4834GW	$649
CA4834MW	$699
CA4834MB	$699

AISHUANG
EAU DE TOILETTE

Waverly

Discover the beauty of the above counter Waverly basin, reflecting the calmness of ocean waves. Crafted from solid surface, Its beautifully balanced proportions create an elegant masterpiece, enhancing the ambience of your bathroom with timeless allure.

Basin

Gloss White	Matte White	Matte Black
GW	MW	MB

600mm

Size	600*370*190mm
CW6037GW	$499
CW6037MW	$549
CW6037MB	$549

CASCADE

A simple yet elegant above-counter basin, crafted from high-quality solid surface material. Its subtle design enhances the bathroom's style while being durable and built to last.

1

2

3

4

5

6

Basin

Gloss White

GW

Matte White

MW

Matte Black

MB

1 BEL3636

Size 360*360*115mm

BEL3636-GW	$ 220
BEL3636-MW	$ 320
BEL3636-MB	$ 320

1 BEL4040

Size 400*400*125mm

BEL4040-GW	$ 220
BEL4040-MW	$ 320
BEL4040-MB	$ 320

2 CA410R

Size 410*410*120mm

CA410R-GW	$ 220
CA410R-MW	$ 320
CA410R-MB	$ 320

3 PA4014

Size 400*400*140mm

PA4014	$ 220
PA4014-MW	$ 320
PA4014-MB	$ 320

4 CA4931

Size 490*310*130mm

CA4931-GW	$ 220
CA4931-MW	$ 320
CA4931-MB	$ 320

4 CA5836

Size 580*360*120mm

CA5836-GW	$ 220
CA5836-MW	$ 320
CA5836-MB	$ 320

5 CA4035AR

Size 400*350*130mm

CA4035AR-GW	$ 220
CA4035AR-MW	$ 320
CA4035AR-MB	$ 320

6 CA3838SQ

Size 375*375*130mm

CA3838SQ-GW	$ 220
CA3838SQ-MW	$ 320
CA3838SQ-MB	$ 320

6 CA415SQ

Size 415*415*120mm

CA415SQ-GW	$ 220
CA415SQ-MW	$ 320
CA415SQ-MB	$ 320

6 CA5038

Size 580*350*120mm

CA5038-GW	$ 220
CA5038-MW	$ 320
CA5038-MB	$ 320

ELBA

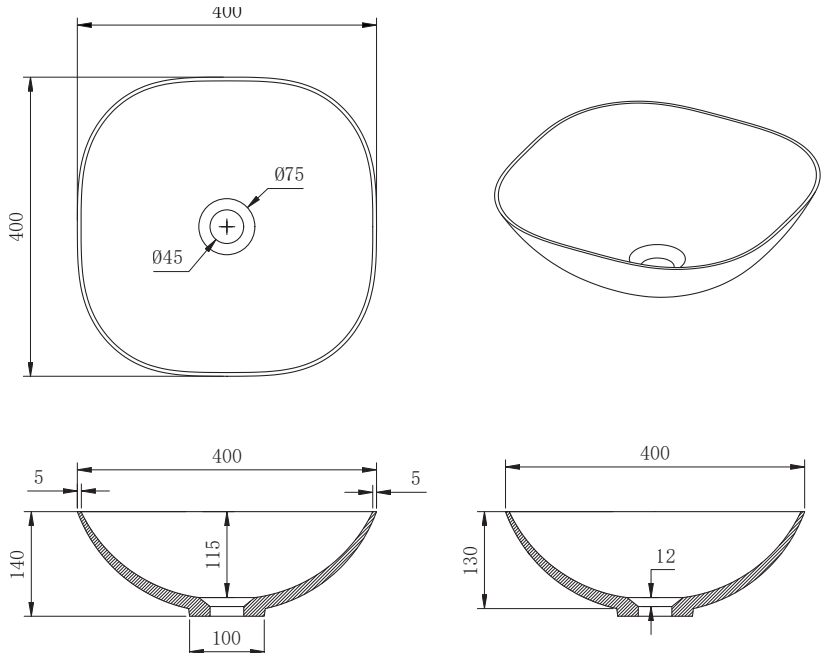
400
400
Ø75
Ø45
400
5
5
140
115
100
400
130
12

KIRKBY

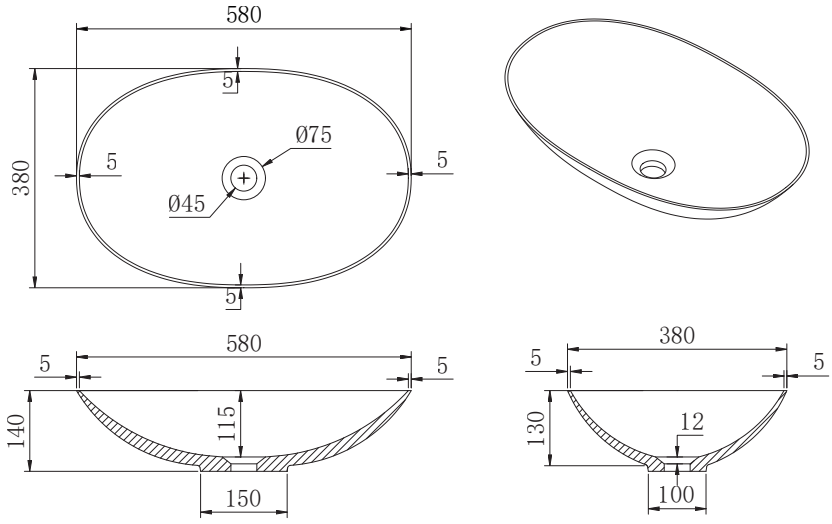
580
5
380
5
Ø75
Ø45
5
5
580
5
5
140
115
150
380
5
5
130
12
100

PERCY

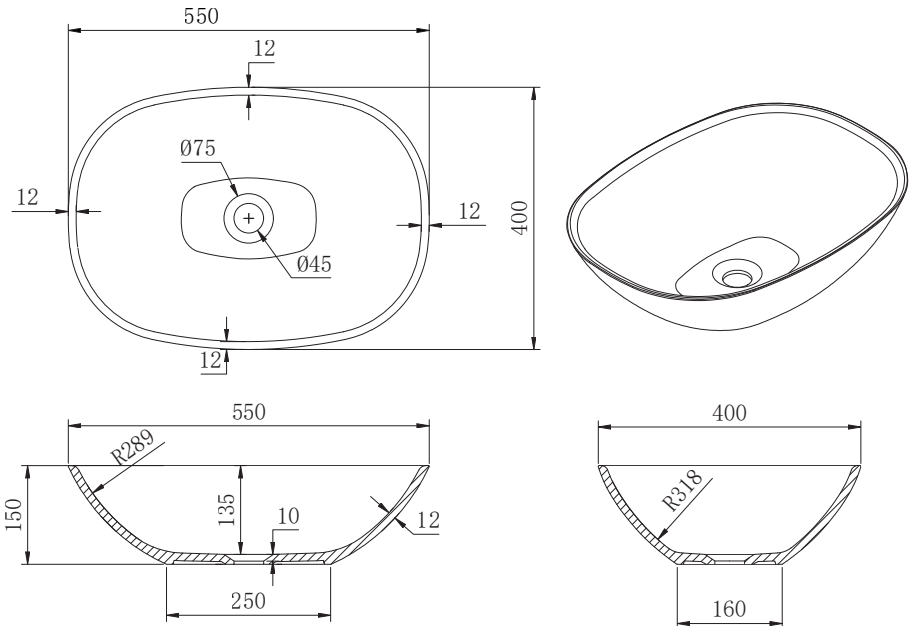
550
12
Ø75
12
12
400
Ø45
12
550
400
R289
R318
150
135
10
12
250
160

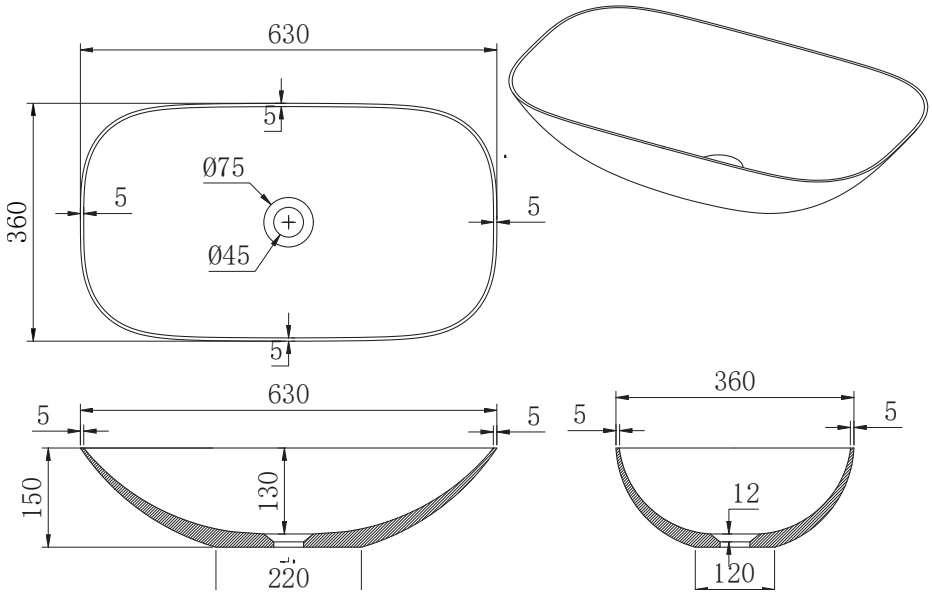
630
5
Ø75
5
5
360
Ø45
5
630
360
5
5
5
5
150
130
12
220
120

ALLYY

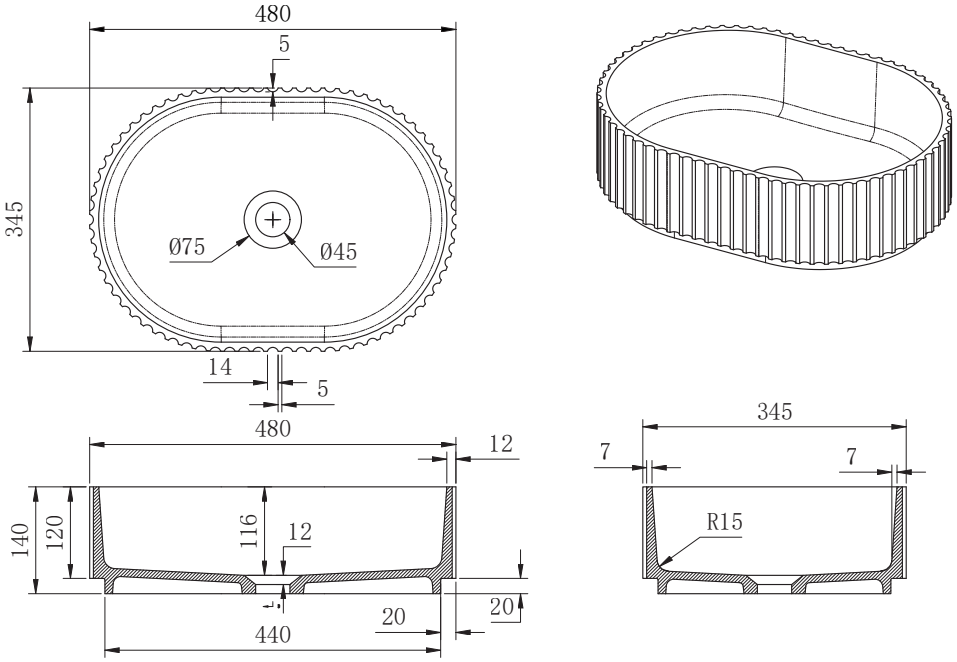

WAVERLY

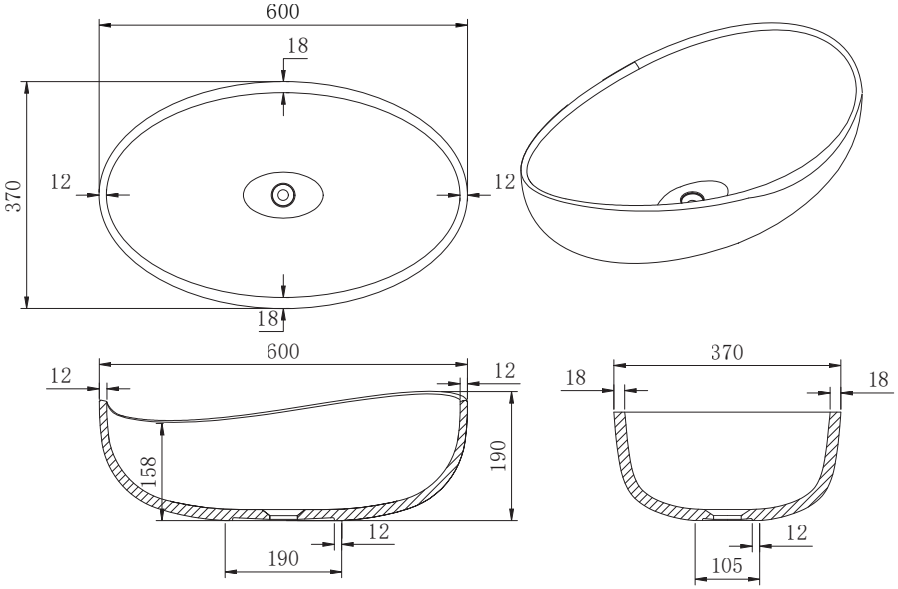

PERCY

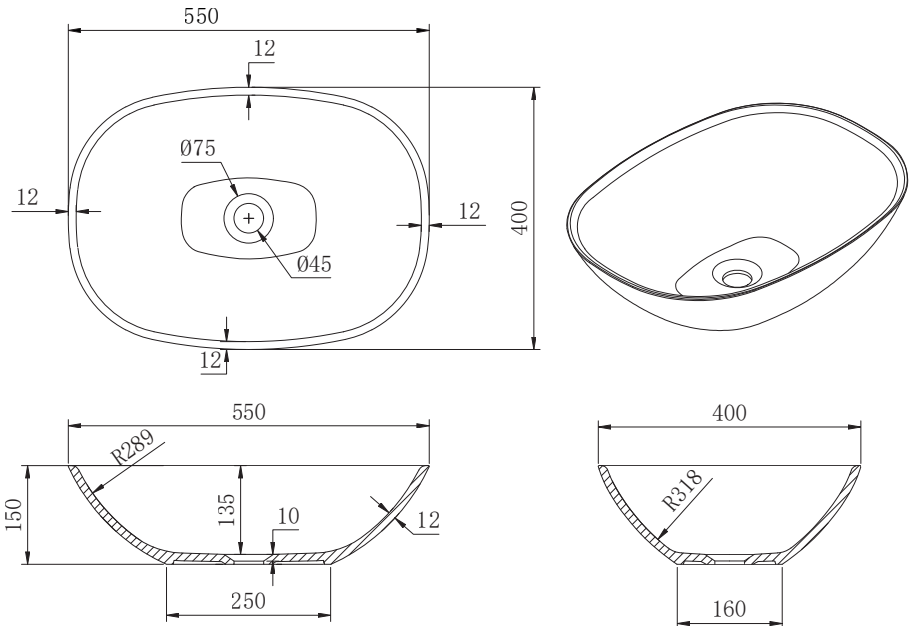
550
12
Ø75
12
12
400
Ø45
12
550
R289
150
135
10
12
250
400
R318
160

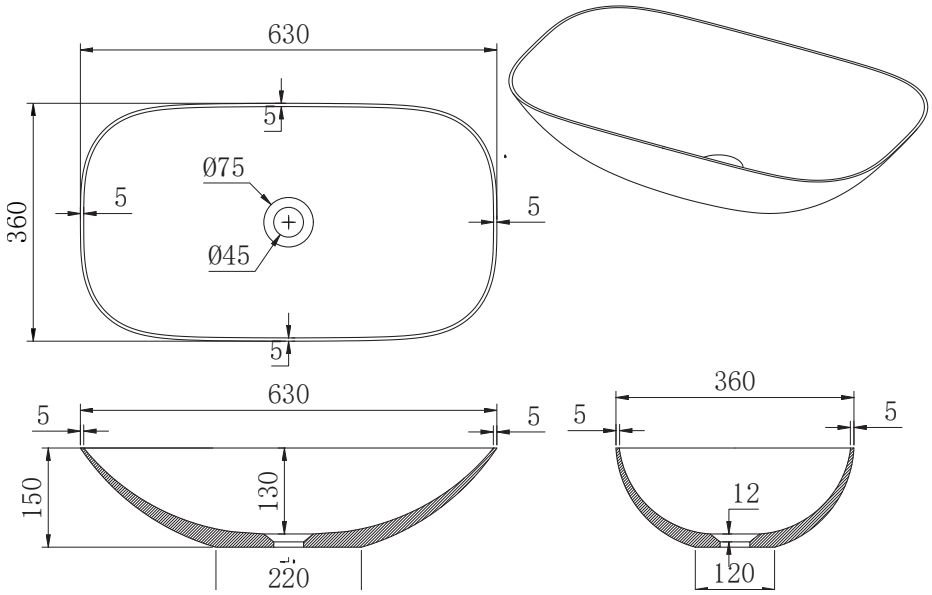
630
5
Ø75
5
5
360
Ø45
5
630
5
5
150
130
220
360
5
5
12
120

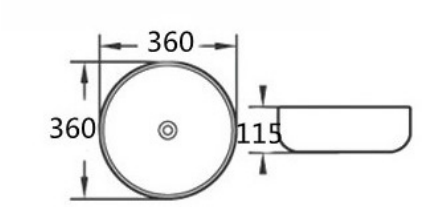

BEL3636

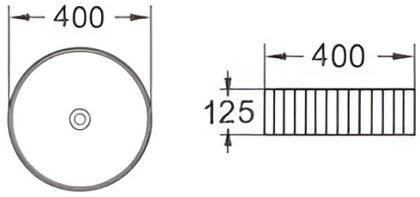

BEL4040

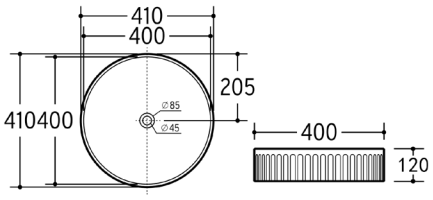

CA410R

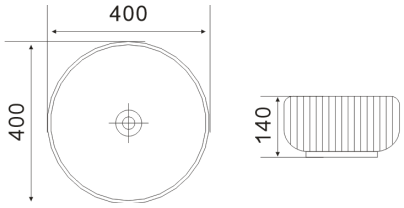

PA4014

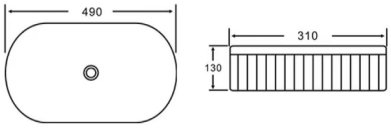

CA4931

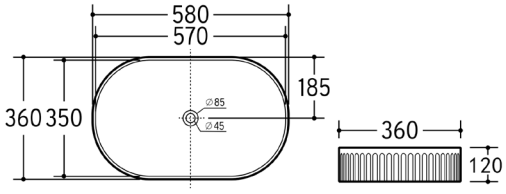

CA5836

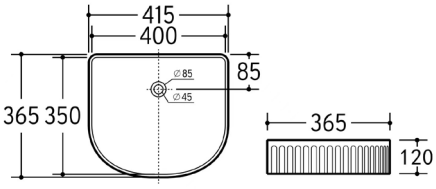

CA4135AR

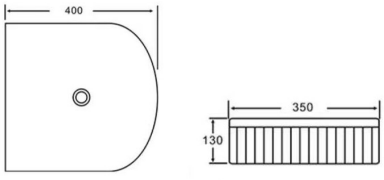

CA3838SQ

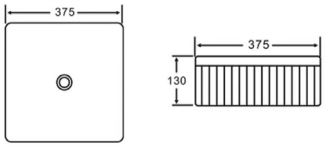

CA3838SQ

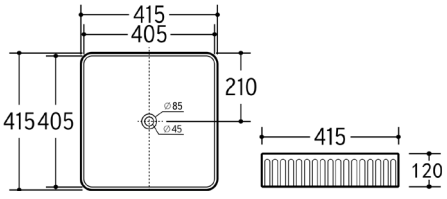

CA415SQ

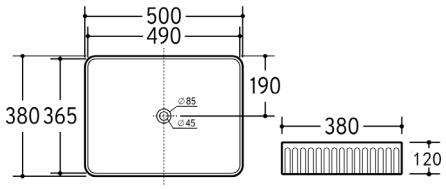

CA5038

CETO Bath

Awaken Your Senses with Bathtub Beauty

Drawing inspiration from the graceful movement of sea waves to craft its timeless and minimalist design. Elevate your modern bathroom with clean lines and a touch of nature's beauty. Create a serene and elegant modern bathroom with CETO natural touches.

Cascade

The Cascade features a fluted V-Groove Line surround design, crafted from solid surface stone and available in two colors. It combines a striking aesthetic with lasting durability, making it a perfect addition to any bathroom.

Bathtub

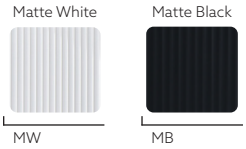

1700mm

Size	1700*750*550mm
CABT1700MW	$4390
CABT1700MB	$4590

Harrrington

The Harrington is a classic solid surface freestanding bathtub, featuring a French-inspired design with gracefully slim edges. Its refined style pairs perfectly with traditional bathroom spaces, adding an elegant and timeless touch.

Bathtub

Matte White

MW

1500mm

Size	1500*700*680mm
CHBT1500MW	$3890

1700mm

Size	1700*800*680mm
CHBT1700MW	$3999

WAVERLY

The Waverly collection draws inspiration from the natural beauty and artistry of sea waves, now offered in various surface materials. This wide freestanding bathtub serves as the perfect statement piece, exuding delight and elegance.

Bathtub

Matte White

MW

Matte Black

MB

1800mm

Size	1800*1100*620mm
CWBT1800MW	$5190
CWBT1800MB	$5490

ALLY

Meet the Ally Groove bath - a striking Modern & Nordic design, perfecct as a freestanding hero piece in your bathroom renovation. Its symbolic CETO style beautiful V groove enables a flawless layout in your space.

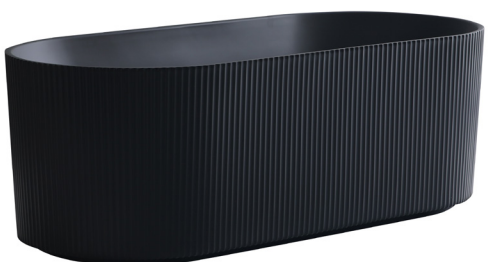

Bathtub

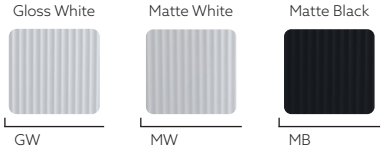

1500mm

Size 1500*750*580mm

AGV1500GW	$1880
AGV1500MW	$2080
AGV1500MB	$2600

1700mm

Size 1700*800*580mm

AGV1700GW	$1980
AGV1700MW	$2180
AGV1700MB	$2690

viz.

BARI

Bari Groove Fluted Oval Freestanding Back to Wall Bath offered in a selection of two appealing colors. Designed with adjustable legs for flexibility, this bath boasts an exquisite aesthetic and outstanding convenience, making it a perfect choice for any setting.

Bathtub

Gloss White	Matte White	Matte Black
GW	MW	MB

1500mm

Size 1500*750*580mm

BGV1500GW	$1880
BGV1500MW	$2080
BGV1500MB	$2600

1700mm

Size 1700*800*580mm

BGV1700GW	$1980
BGV1700MW	$2180
BGV1700MB	$2690

CAPRI

The Capri freestanding bath, designed in a sleek and modern corner rectangular style with an enchanting groove, perfectly complements any bathroom corner while maintaining seamless joins and connections.

Left Corner

Right Corner

Bathtub

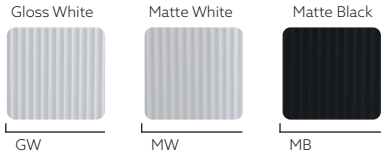

1500mm

Size 1500*750*580mm

CGV1500L-GW	$1880
CGV1500L-MW	$2080
CGV1500L-MB	$2600
CGV1500R-GW	$1880
CGV1500R-MW	$2080
CGV1500R-MB	$2600

1700mm

Size 1700*800*580mm

CGV1700L-GW	$1980
CGV1700L-MW	$2180
CGV1700L-MB	$2690
CGV1700R-GW	$1980
CGV1700R-MW	$2180
CGV1700R-MB	$2690

COMO

Introducing COMO - a stand-alone bathtub with a uniquely round shape, available in various surface materials. Its clean and premium design adds a touch of elegance, making it a desirable inclusion for bathrooms.

CO1280GW-NF

CO1280MW-OF

COGV1280GW/MW

Bathtub

Gloss White — GW

Matte White — MW

1280mm

Size	1280*1280*595mm
CO1280GW-NF	$2119
CO1280MW-OF	$2489
COGV1280GW	$3099
COGV1280MW	$3299

MAYFAIR

Unveil the Mayfair Freestanding Bathtub, boasting gentle curvature and a hint of classic charm. Available in two surface materials, this masterpiece exudes timeless class with its contemporary floating appearance and subtle top lip.

Bathtub

Gloss White — GW

Matte White — MW

1700mm

Size	1700*800*600mm
SB877-1700GW	$2290
SB877-1700MW	$2490

CASCADE

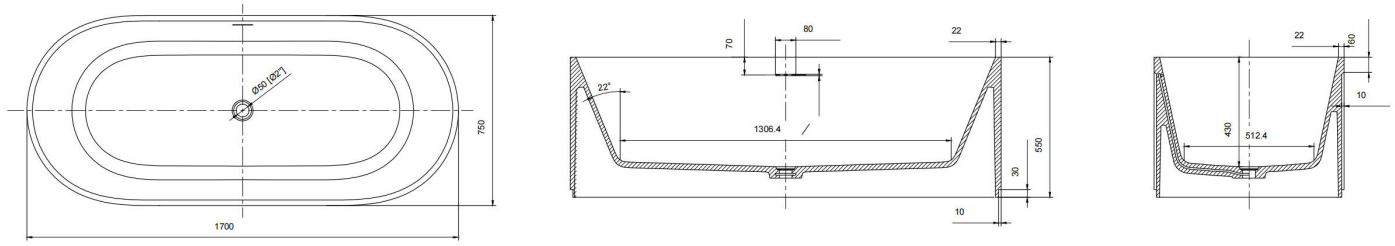

1500mm

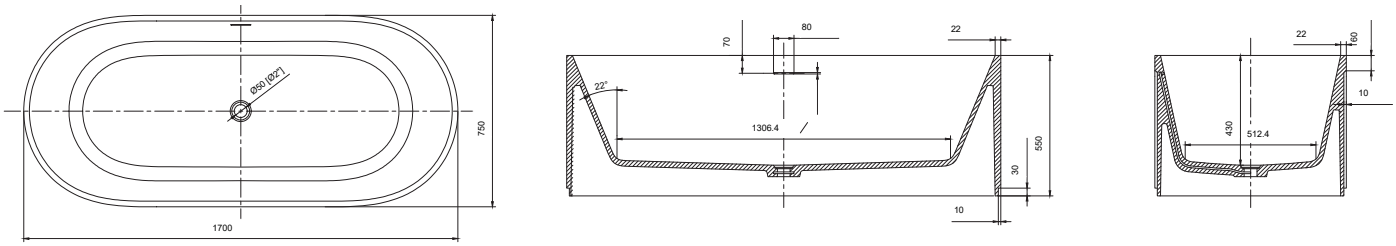

1700mm

HARRINNGTON

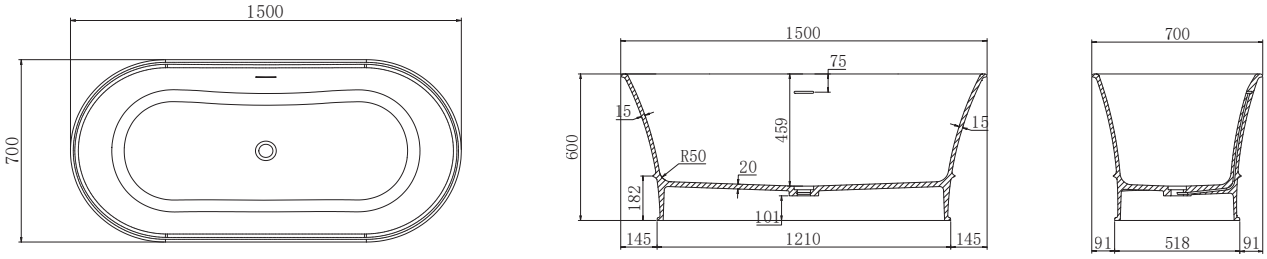

1500mm

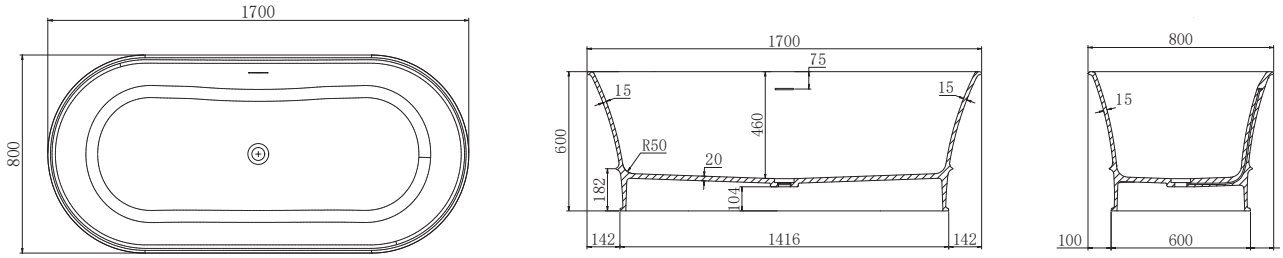

1700mm

Waverly

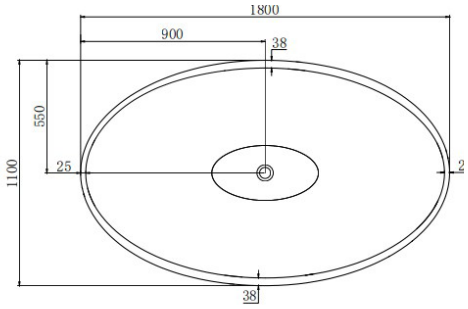

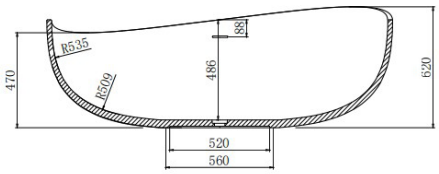

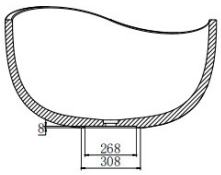

ALLY

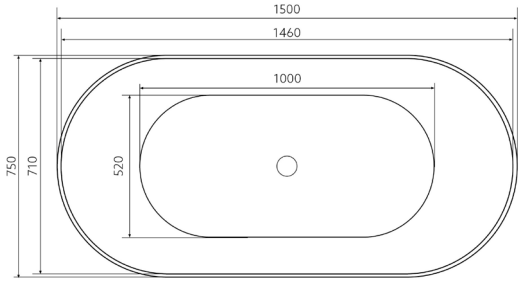

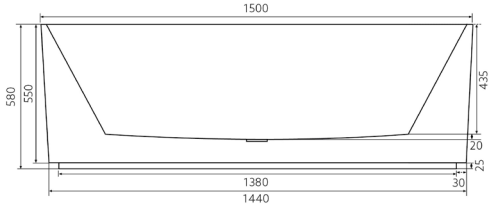

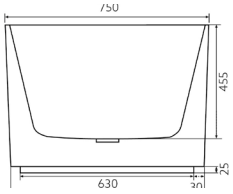

1500mm

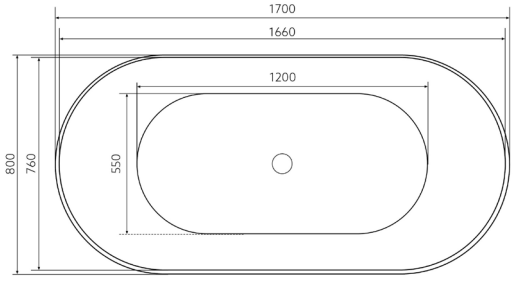

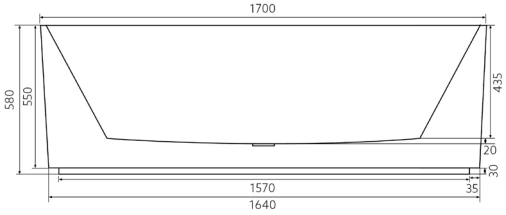

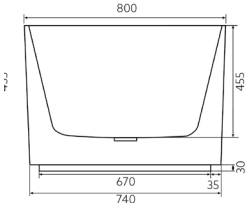

1700mm

BARI

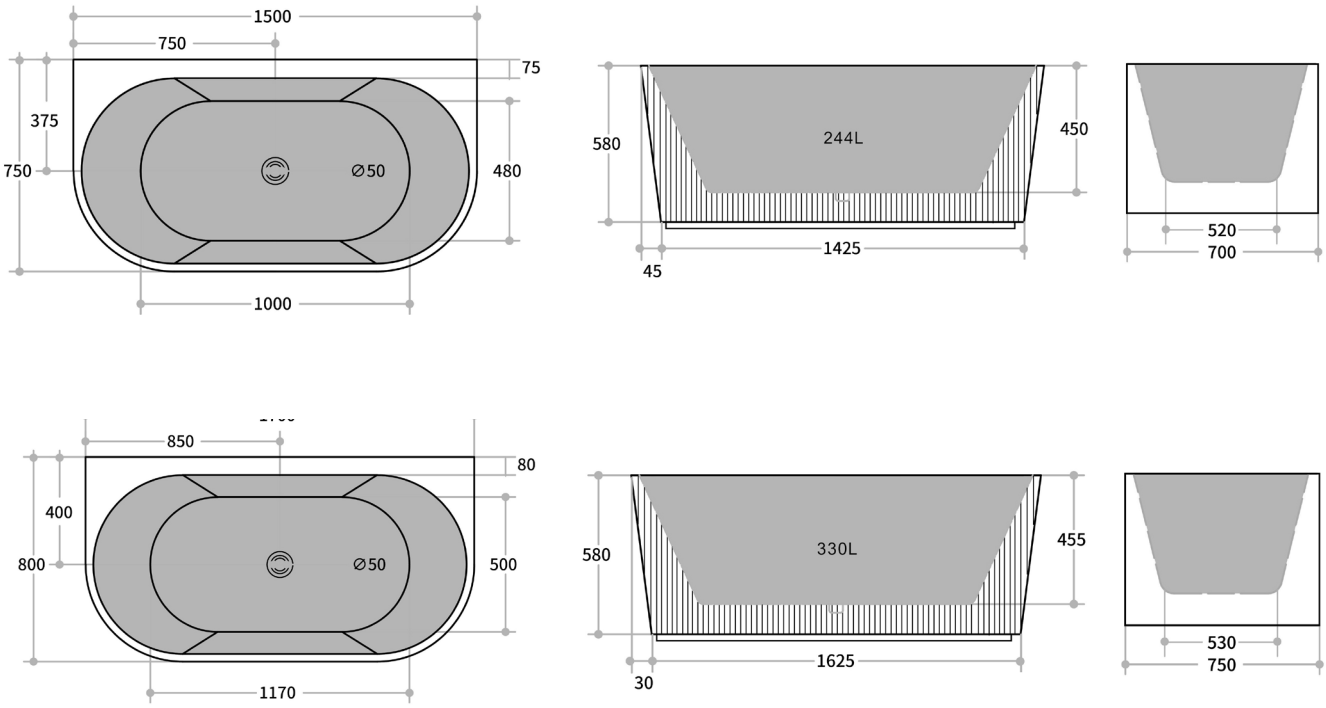

COMO

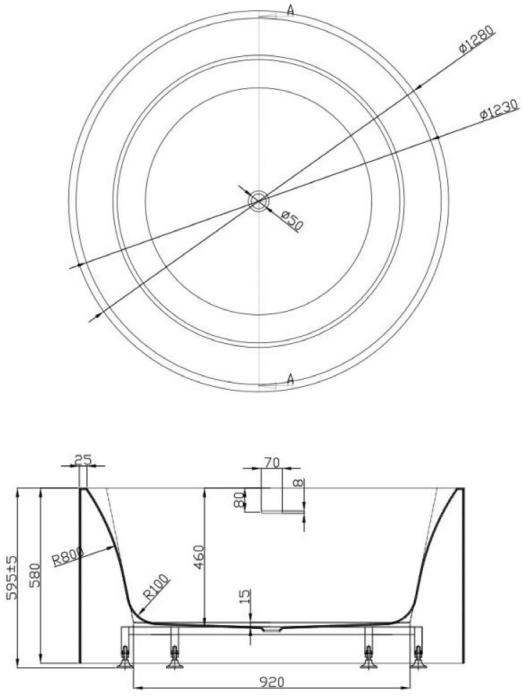

MAYFAIR

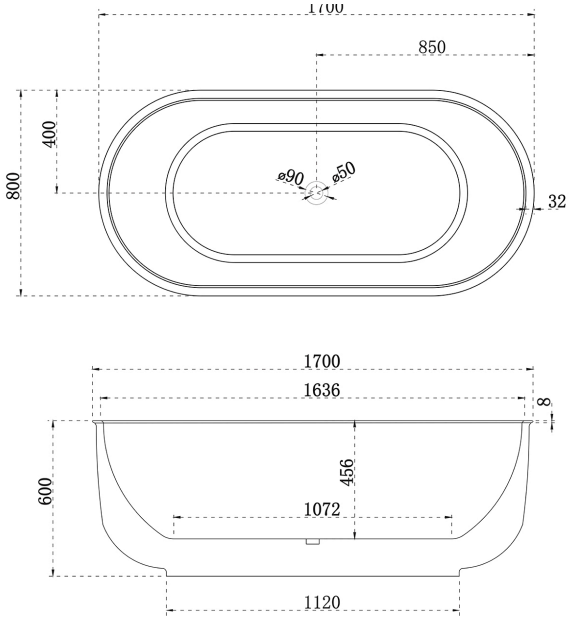

CAPRI

1500 Left

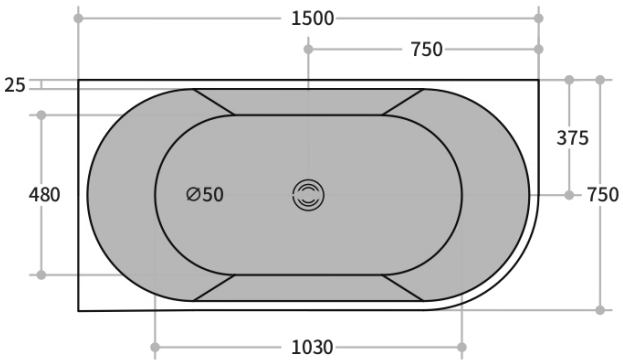

1500 Right

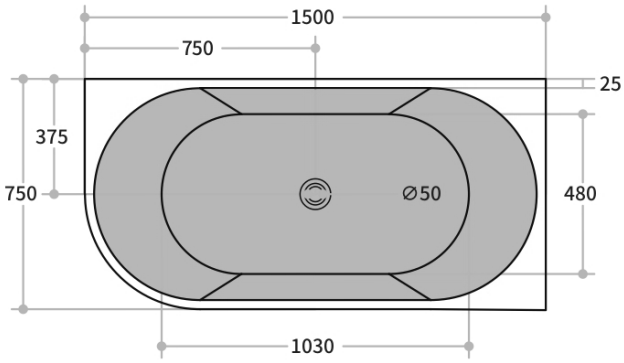

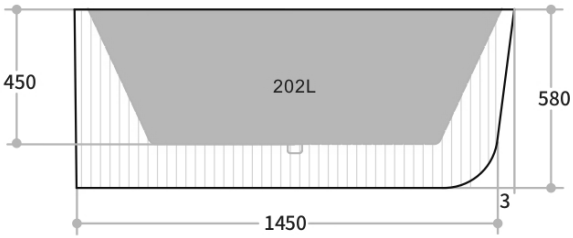

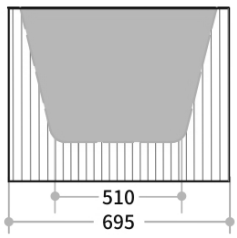

1700 Left

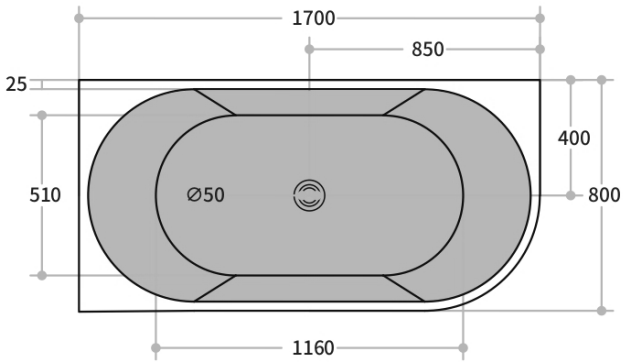

1700 Right

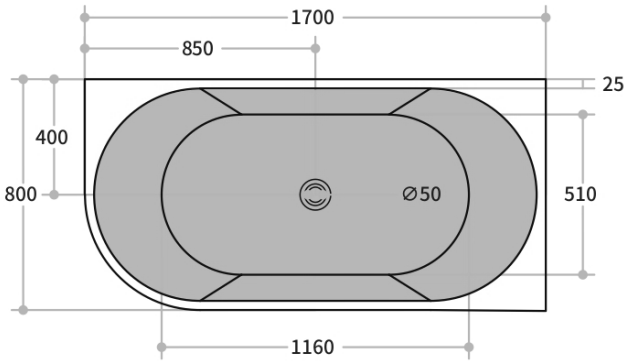

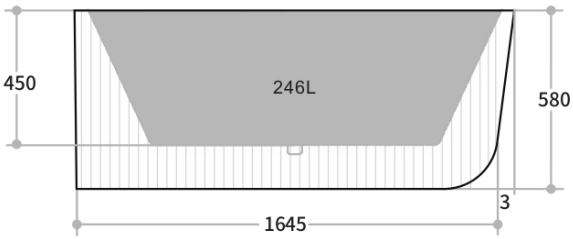

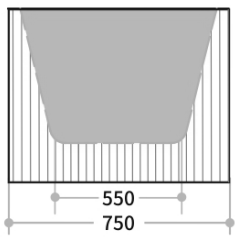

Fireclay Farmhouse Sink

A diverse selection of sinks designed to enhance any kitchen with a variety of styles and color choices. These sinks showcase a refined white gloss glaze, adding a touch of sophistication. Crafted from top-tier fireclay and expertly glazed, they offer exceptional durability and resistance to thermal shock, stains, scratches, and chemicals, elevating their hygiene levels above most sink options.

Camden

The Camden Fireclay Sink comes in various shapes and offers generous depth, catering to the needs of every kitchen. It comes in both stunning glossy and elegant matte colors, and can be installed using either inset or undermount mounting options. Designed to be compatible with food waste disposers, further enhancing its functionality and convenience.

457mm

470mm

670mm

810mm

Sink

Gloss White — GW

Matte Black — MB

457mm

Size 457*457*228mm

FCS457GW	$409
FCS457MB	$489

677mm

Size 677*470*250mm

FCS677GW	$659
FCS677MB	$829

810mm

Size 810*480*254mm

FCS810GW	$849
FCS810MB	$1069

470mm (Round)

Size 470*228mm

FCSR470GW	$409
FCSR470MB	$489

Chelsea

The Chelsea Fireclay Sink is offered in a choice of two colors and includes a Bottom Grid and Chrome Basket Waste. Designed to be compatible with food waste disposers, further enhancing its functionality and convenience.

Sink

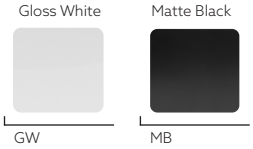

600mm

Size	600*451*253mm
FCS600GW	$579
FCS600MB	$809

Greenwich

The Greenwich Fireclay Sink provides a selection of waste outlet styles, catering to a range of kitchen designs for your personal space. It features a reversible design with both fluted and flat options, adorned with a beautiful groove pattern. Additionally, it offers versatile mounting choices, including undermount, flush mount, and built-up installations.

828mm - Single

828mm - Double

Sink

Gloss White — GW

Matte Black — MB

828mm

Size	828*450*252mm
FCS828GW	$949
FCS828MB	$1129

828mm

Double sink

Size	828*450*255mm
FCS828-D-GW	$1059
FCS828-D-MB	$1249

Kensington

The Kensington Fireclay Sink embodies a timeless Hampton design and is available in two attractive color choices. It combines elements of both Hampton and flat styles, and you have the flexibility to choose from a variety of mounting options, such as undermount, flush mount, and built-up configurations.

Sink

Gloss White — GW

Matte Black — MB

758mm

Size	758*453*254mm
FCS758GW	$759
FCS758MB	$979

CAMDEN

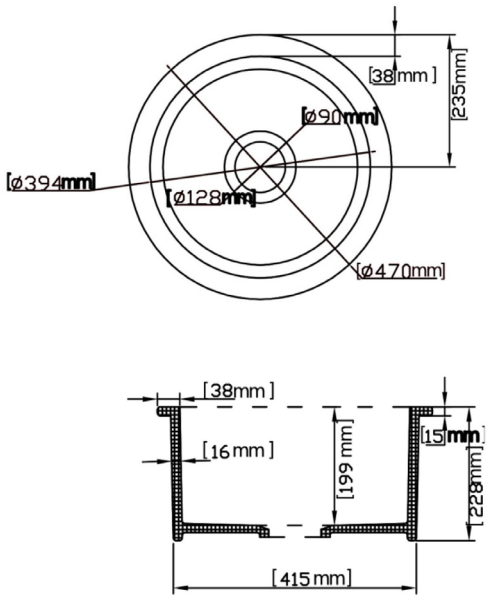

470mm

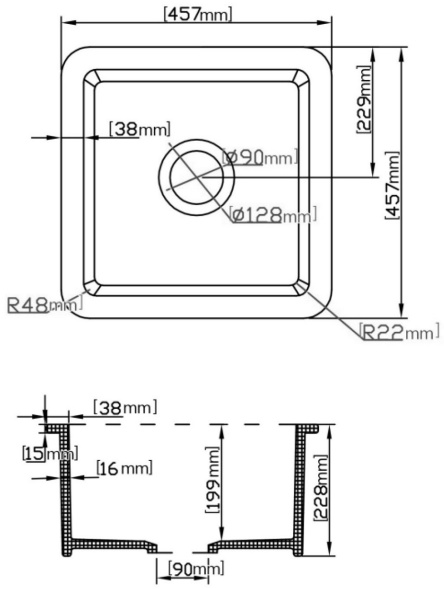

457mm

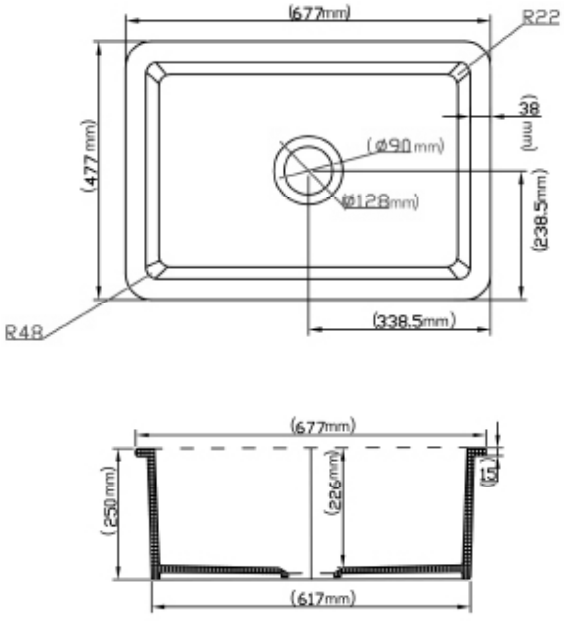

667mm

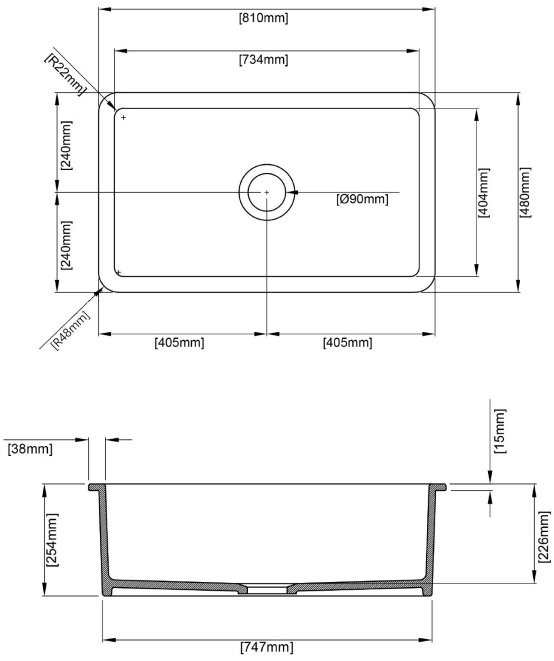

810mm

GREENWICH

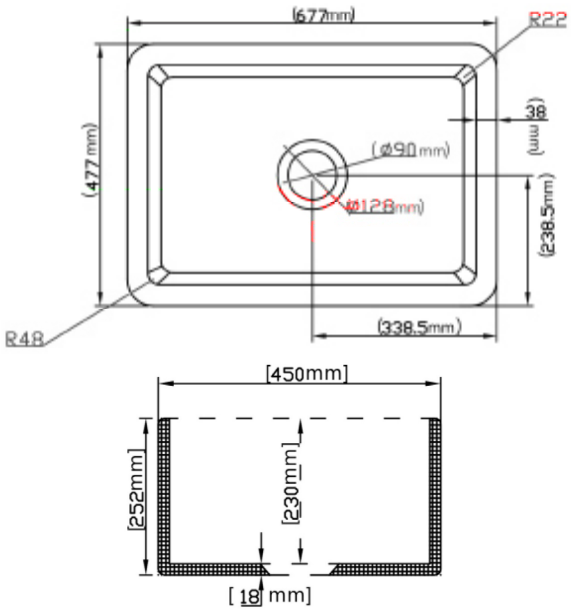

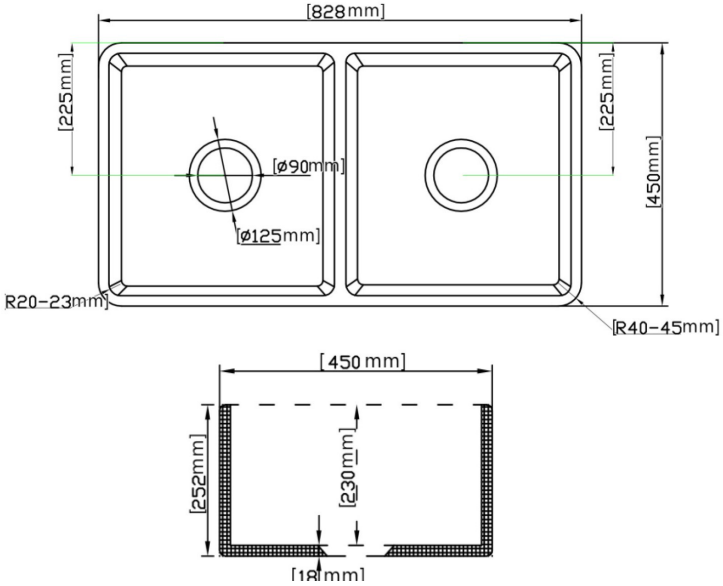

CHELSEA

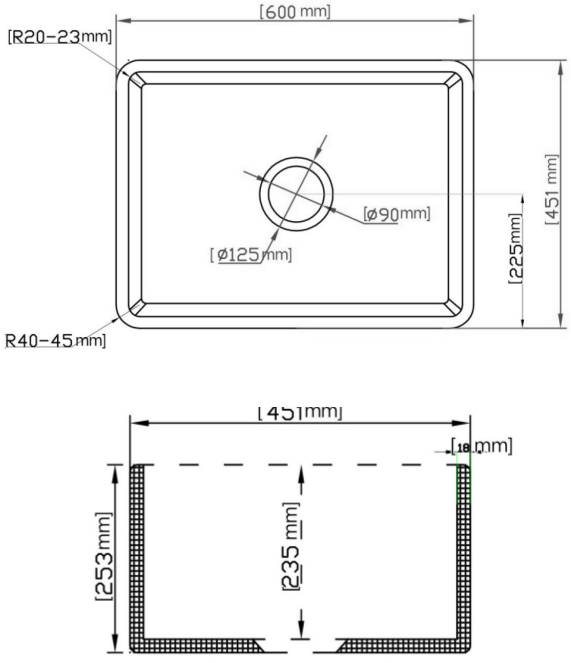

KENSINGTON

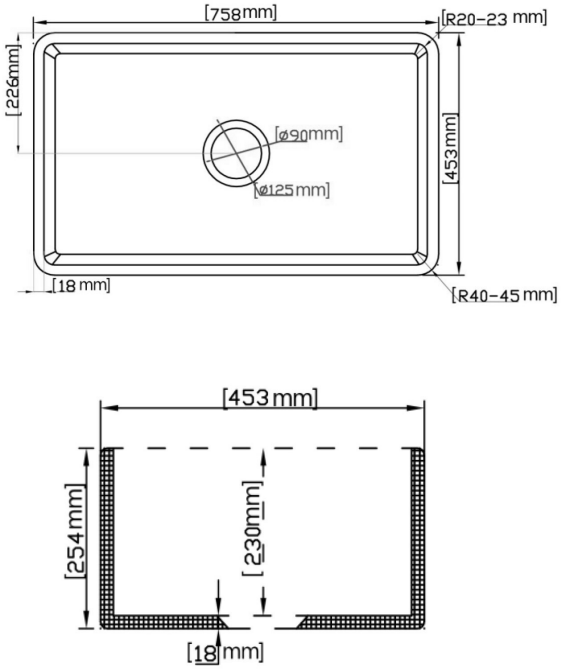

CETO

Bathroom Art

CETO

Bathroom Art

Sydney **Poseidon Bathroom and Kitchen**

Address 1C/246 Miller Rd, Villawood NSW 2163

Phone 02 9748 4735

Email sale@poseidonbk.com.au

Website www.poseidonbk.com.au

Melbourne **Ceramic Exchange**

Address 4 Zenith Road, Dandenong South VIC 3175

Phone 03 9794 6333

Email sales.vic@ceramicexchange.com.au

Website www.kdkbathrooms.com.au

Brisbane **Ceramic Exchange**

Address Unit 5/117 Grindle Rd, Rocklea QLD 4106

Phone 07 3493 0093

Email sales-qld@ceramicexchange.com.au

Website www.kdkbathrooms.com.au